MITSUBISHI ELECTRIC

PROGRAMMABLE CONTROLLERS
MELSEC-F

USER'S MANUAL

FX-10DM-E DISPLAY MODULE

Foreword

- This manual contains text, diagrams and explanations which will guide the reader in the correct installation and operation of the DISPLAY MODULE FX-10DM-E. It should be read and understood before attempting to install or use the unit.
- If in doubt at any stage of the installation of DISPLAY MODULE FX-10DM-E always consult a professional electrical engineer who is qualified and trained to the local and national standards which apply to the installation site.
- If in doubt about the operation or use of DISPLAY MODULE FX-10DM-E please consult the nearest Mitsubishi Electric distributor.
- This manual is subject to change without notice.

Notification of CE marking

CE

The following products have shown compliance through direct testing (to the identified standards) and design analysis (forming a technical construction file) to the European Directive for Electromagnetic Compatibility (2004/108/EC) when used as directed by the appropriate documentation.

- This product is designed for use in industrial applications.
- Authorized Representative in the European Community: Mitsubishi Electric Europe B.V.
  Gothaer Str. 8, 40880 Ratingen, Germany

Type : Programmable Controller (Open Type Equipment)

Models : MELSEC DM series products, identified here, manufactured from
December 1st, 2009 FX-10DM-E
(For this product see note under and over the page)

Standard		Remark
EN61131-2 :2007 Programmable controllers -Equipment, requirement and tests	EMI	Compliance with all relevant aspects of the standard. (Radiated Emissions)
	EMS	Compliance with all relevant aspects of the standard. (RF Immunity, Burst Transients and ESD)

For more details please contact the local Mitsubishi Electric sales site.

Notes Regarding the use of DM Units

General notes on the use of Communication Cables

Any device which utilizes a data communication function is susceptible to the wider effects of local EMC noise. Therefore, when installing any communication cables care should always be taken with the routing and location of those cables. The DM units identified on the previous page are compliant with the EMC requirement when the following communication cables are used :

Table 0.1:

DM Unit	New Cables	Existing Cables	User Made Cables
FX-10DM-E	From version A (JY309C24571A) of the FX-20P-CAB0/EN	FX-20P-CAB0 modified as shown in EX.1	This cable need to be independently tested by the user to demonstrate EMC compatibility when they are used with Mitsubishi DM units and Programmable Controllers.

When using the FX-20P-CAB0/EN cable the Earth Strap must be connected to a suitable earth point.

Ex. 1

FX-20P-CAB0

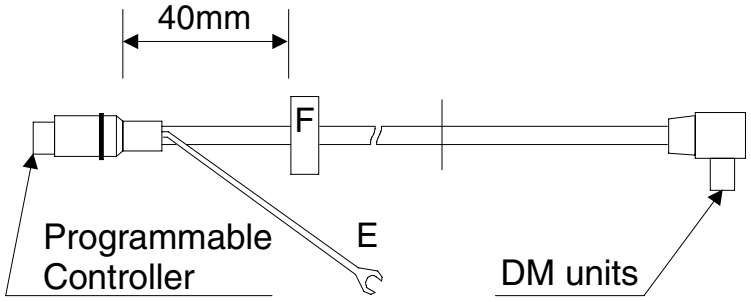

E = Additional earth strap connected to the cables shield. Free end of the earth strap must be connected to an earth point.

F = Ferrite core
Ex. Tokin - ESD-R-14S or similar

FX-10DM-E DISPLAY MODULE

USER'S MANUAL

Manual number : JY992D86401
Manual revision : H
Date : April 2015

This manual confers no industrial property rights or any rights of any other kind, nor does it confer any patent licenses. Mitsubishi Electric Corporation cannot be held responsible for any problems involving industrial property rights which may occur as a result of using the contents noted in this manual.

Guidelines for the Safety of the User and Protection of the DISPLAY MODULE FX-10DM-E.

This manual provides information for the use of the DISPLAY MODULE FX-10DM-E. The manual has been written to be used by trained and competent personnel. The definition of such a person or persons is as follows:

a) Any engineer who is responsible for the planning, design and construction of automatic equipment using the product associated with this manual, should be of a competent nature, trained and qualified to the local and national standards required to fulfill that role. These engineers should be fully aware of all aspects of safety with regards to automated equipment.

b) Any commissioning or service engineer must be of a competent nature, trained and qualified to the local and national standards required to fulfill that job. These engineers should also be trained in the use and maintenance of the completed product. This includes being completely familiar with all associated documentation for said product. All maintenance should be carried out in accordance with established safety practices.

c) All operators of the completed equipment (see Note) should be trained to use this product in a safe manner in compliance to established safety practices. The operators should also be familiar with documentation which is associated with the actual operation of the completed equipment.

Note : The term ‘completed equipment’ refers to a third party constructed device which contains or uses the product associated with this manual.

Notes on the Symbols Used in this Manual

At various times throughout this manual certain symbols will be used to highlight points which are intended to ensure the users personal safety and protect the integrity of equipment. Whenever any of the following symbols are encountered its associated note must be read and understood. Each of the symbols used will now be listed with a brief description of its meaning.

Hardware Warnings

1) Indicates that the identified danger **WILL** cause physical and property damage.

2) Indicates that the identified danger could **POSSIBLY** cause physical and property damage.

3) Indicates a point of further interest or further explanation.

Software Warnings

4) Indicates special care must be taken when using this element of software.

5) Indicates a special point which the user of the associate software element should be aware.

6) Indicates a point of interest or further explanation.

- Under no circumstances will Mitsubishi Electric be liable responsible for any consequential damage that may arise as a result of the installation or use of this equipment.
- All examples and diagrams shown in this manual are intended only as an aid to understanding the text, not to guarantee operation. Mitsubishi Electric will accept no responsibility for actual use of the product based on these illustrative examples.
- Please contact a Mitsubishi Electric distributor for more information concerning applications in life critical situations or high reliability.

Guideline v

1. Introduction 1-1
1.1 Outline of product 1-1
1.2 Features 1-1
1.3 Introduction of functions 1-3
1.4 Preparation and startup 1-6
1.5 Product configuration 1-7
1.5.1 Accessories 1-7
1.5.2 Options 1-7
1.6 Name of each part 1-8
1.7 Key functions and how to look at device indication 1-9
1.7.1 Key functions 1-9
1.7.2 How to look at device indication 1-11

2. Specifications 2-1
2.1 Outside dimensions 2-1
2.2 Power supply specifications 2-1
2.3 General specifications 2-2
2.4 Performance specifications 2-3
2.5 Connectable PLC 2-4
2.6 Device setting range (maximum range) 2-4
2.7 Comment and message display specifications 2-6

3. Installation, Wiring and Maintenance 3-1
3.1 Installation 3-1
3.2 Wiring 3-4
3.2.1 Connection of cable 3-4
3.2.2 Cautions on connection 3-7
3.3 Maintenance 3-7

4. "SYSTEM MODE" Menu 4-1
4.1 Menu list 4-2
4.2 Functions offered in 10DM 4-3

5. Environmental Setting Function 5-1
5.1 Menu display 5-1
5.2 "MONITOR SET" 5-2
5.3 "DEVICE RANGE" 5-4
5.3.1 Description on setting screen and displayed contents 5-4
5.3.2 Operating procedure for "DEVICE RANGE" 5-5
5.4 "DATA RANGE" 5-7
5.4.1 Description on setting screen and displayed contents 5-7
5.4.2 Operating procedure for "DATA RANGE" 5-8
5.5 "OTHER" 5-9
5.5.1 Operating procedure for "OTHER" 5-11

6. Display Function 6-1
6.1 Description on menu display and functions 6-1
6.2 "ENTRY MONITOR" 6-3
6.3 Display setting procedure 6-5
6.3.1 Contents of setting and display in 10DM 6-6
6.3.2 "DISPLAY SET" 6-11
6.3.3 Operating procedure for "ENTRY MONITOR" 6-12
6.3.4 Creation of comments 6-14
6.3.5 Creation of messages 6-16
6.3.6 Setting program example 6-18
6.4 "DEVICE MONITOR" 6-20
6.5 Operating procedure for devices 6-22
6.5.1 Change of word devices for device monitor 6-22
6.5.2 Change of data in device monitor (T) 6-23
6.5.3 Change of data in device monitor(D) 6-24
6.5.4 Change of sign (+ or -) of data 6-26
6.5.5 Operating procedure to release keyword 6-27
6.5.6 Reset of word devices 6-28

7. Attachment 7-1
7.1 Displayed characters (ASCII codes) 7-1
7.2 "ENTRY MONITOR" setting sheet 7-2
7.3 Error message list 7-4

How to read this manual

This manual describes explanation as follows.

1. Function list

By selecting "4: OTHER"-"1: LANGUAGE", you can select Japanese (upper line) or English (lower line). Highlighted characters in explanation on the functions in this manual indicate the setting at the time of shipment from the factory.

Display	Description on major functions	Effective display setting	Reference
3: DATA RANGE	Allows to set the range of word devices which can be changed and the numeric value range which is available for data (current value and set value). [Setting] **0: ALL OK** 1: RANGE OK 2: ERROR-ALL DEV	"1: ENTRY MONITOR"	

2. Operation

In explanation on each function, representative key operations are described.
In such description, the symbols ▲, ▼, ENT, CLR and FNC indicate key inputs.
The expression "[A] + [B]" indicates the operation to press the [A] and [B] keys at the same time.
If you press the [A] key at first then the [B] keys later for this expression, buzzer sounds continuously to indicate that the input is invalid. However, when the [CLR] key is included in the expression such as "[A] + [CLR]", press the [A] key at first then the [CLR] key soon.
For the detailed function of each key, refer to Paragraph 1.7.1.

1. Introduction

This section describes the product configuration and the system configuration of the FX-10DM-E (hereafter referred to as "10DM"). Make sure that all accessories are included in the package before using the 10DM. (Refer to Paragraph 1.5.)

1.1 Outline of product

The 10DM is mounted on the surface of the control panel or the operation panel, and connected to the programming connector of the FX Series PLC located inside the control panel or the operation panel.
The 10DM is a small display module with which you can monitor word devices of the PLC and change the data using the switches of the 10DM while looking at the display unit of the 10DM.

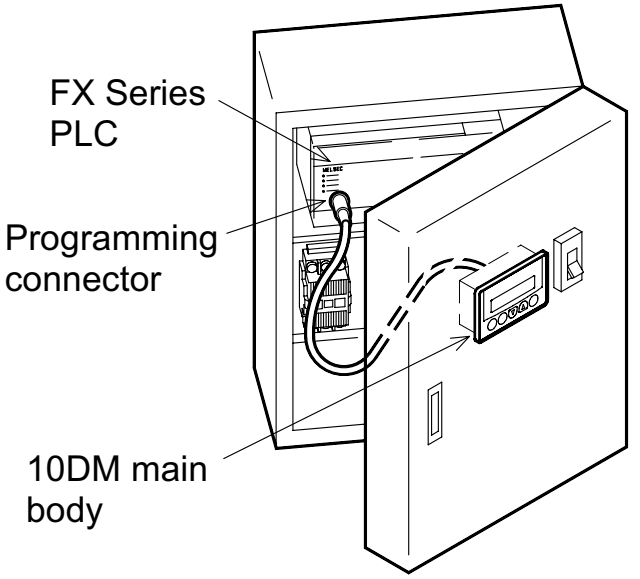

1.2 Features

1) The STN character type liquid crystal display unit with LED backlight displays "16 characters x 2 lines", and is easy to look at.
2) As to data registers (D), up to 2 points of 16- or 32-bit data can be displayed and changed in signed decimal numbers.
3) As to counters (C) and timers (T), the current value and the set value can be displayed and changed.
4) The setting of the entry monitor and the system setting information stored in the EEPROM is held against power interruption.

1.Introduction
2.Specifications
3.Installation
Wiring
Maintenance
4."SYSTEM MODE" Menu
5.Environmental Setting
"MONITOR SET"
"OTHER"
6.Display
"ENTRY MONITOR"
DEVICE MONITOR
7.Attachment
ASCII codes
Setting sheet
Error message list

5) Five mechanical keys easy to press are provided to facilitate changes of data values.
6) A word device name can be displayed in Katakana comment (Katakana, alphabet and numeric characters) written in the PLC.
7) ASCII codes can be stored in data registers of the PLC, and the 10DM can be used as an easy message display unit.

1.3 Introduction of functions

This paragraph introduces the display function and other functions of the 10DM.

1. Display function

The 10DM offers the following two types of displays.

1) Entry monitor display (Refer to Paragraph 6.2.)

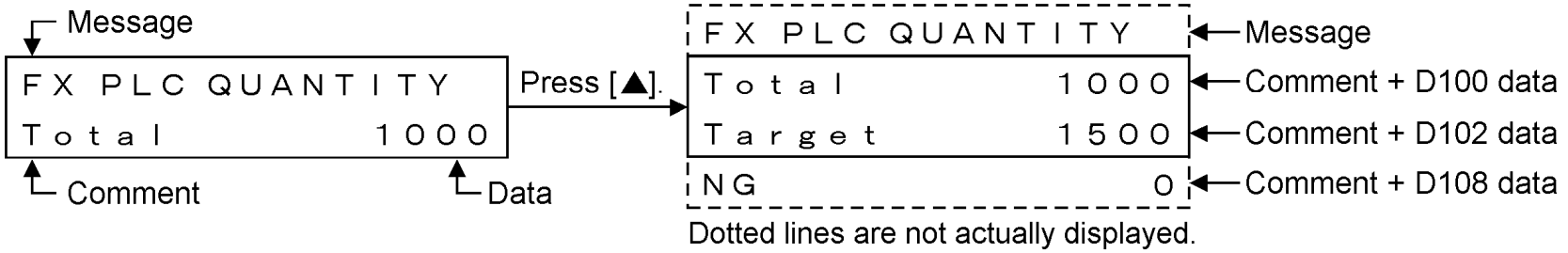

a) Messages, comments and word devices (D, T, C) can be displayed.
- In the message display, you can change the number of displayed characters from the PLC.
- In the comment display, comments in Katakana characters stored in a program in the PLC are displayed.
- Up to 8 items can be displayed, and scrolled with the [▲] and [▼] keys.

b) You can change the data with simple key operations.

2) Device monitor display (Refer to Paragraph 6.4.)

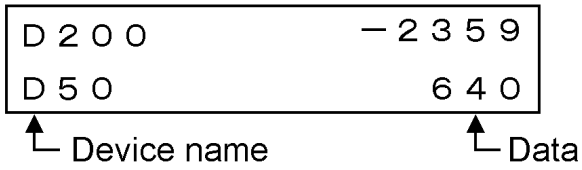

a) Word devices (D, T, C) can be displayed in up to 2 lines.
b) You can change the data with simple key operations.

1.Introduction
2.Specifications
3.Installation
Wiring
Maintenance
4."SYSTEM MODE" Menu
5.Environmental Setting
"MONITOR SET"
"OTHER"
6.Display
"ENTRY MONITOR"
DEVICE MONITOR
7.Attachment
ASCII codes
Setting sheet
Error message list

2. Other functions

1) Device range/data range setting function (Refer to Paragraphs 5.3 and 5.4.)

   You can set restriction to word devices whose data can be changed while the display function of the 10DM is used.

   [Device range] Either of the following settings is available.

   - All devices (completely permitted)
   - Up to eight points can be set as the word device range between the minimum and maximum values.
   - No device (completely prohibited)

   [Data range]

   - All devices (completely permitted)
   - Up to eight points can be set as the word device range between the minimum and maximum values and the available data range.
   - No device (completely prohibited)

2) Reset function (Refer to Paragraph 6.5.6.)

   This function resets data (current value) of word devices while the device monitor or the entry monitor is displayed.

3) Keyword release function (Refer to Paragraph 6.5.5.)

When you try to change the data while the display function of the 10DM is used, if a keyword is set in a program in the PLC, the keyword input screen shown in the figure below appears.

When the keyword you have input agrees with the one set in the PLC, you can change the data. (You cannot change or invalidate the keyword set in the PLC.)

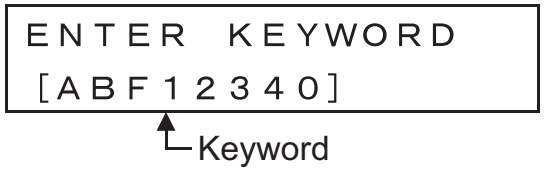

1.Introduction
2.Specifications
3.Installation
Wiring
Maintenance
4."SYSTEM MODE" Menu
5.Environmental Setting
"MONITOR SET"
"OTHER"
6.Display
"ENTRY MONITOR"
DEVICE MONITOR
7.Attachment
ASCII codes
Setting sheet
Error message list

1.4 Preparation and startup

This paragraph describes the procedure from installation and wiring of the 10DM to menu display in the 10DM.

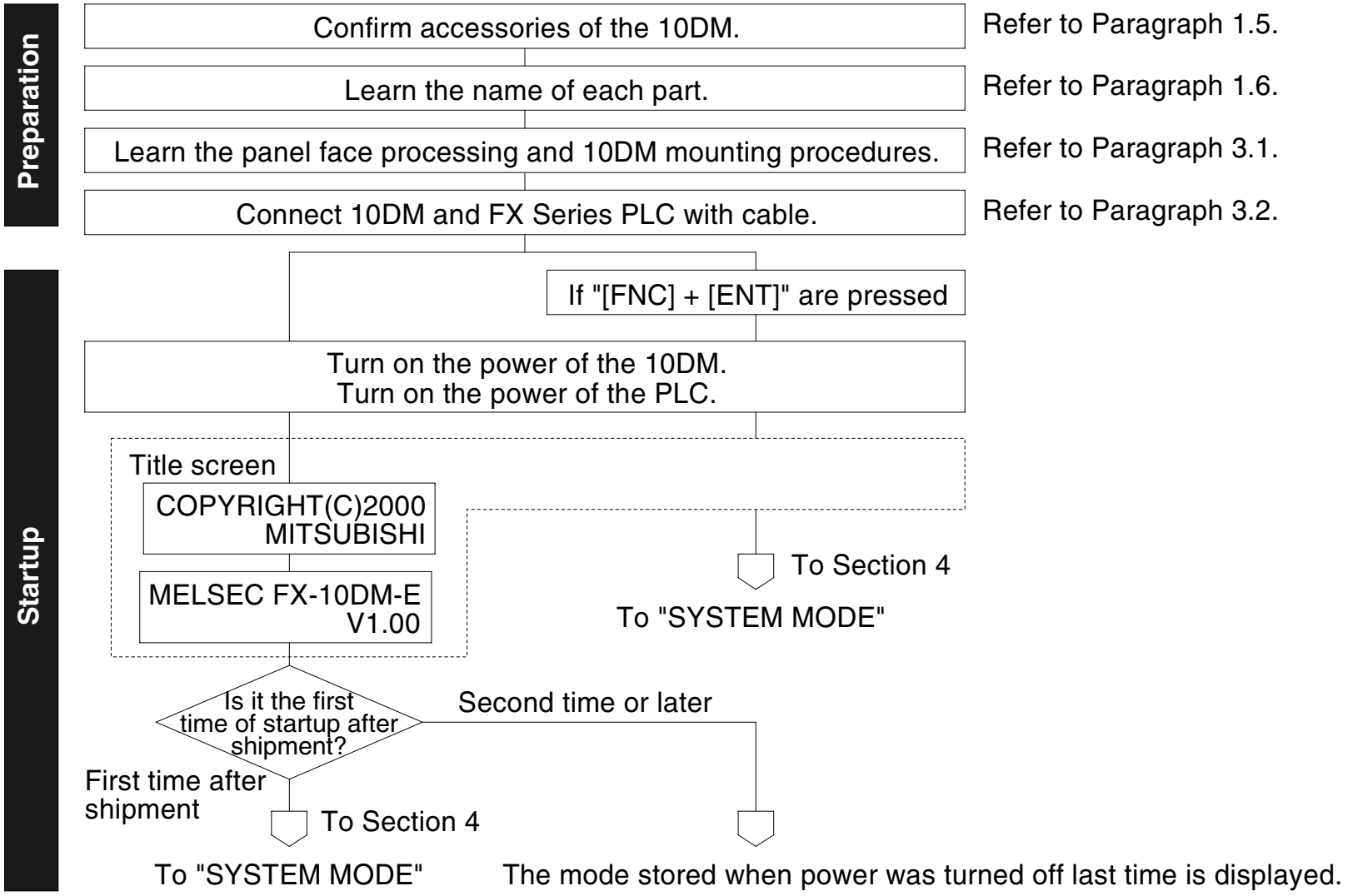

1.5 Product configuration

The 10DM main body and accessories are packaged together as shown below. Make sure that all accessories are packaged.

10DM main body

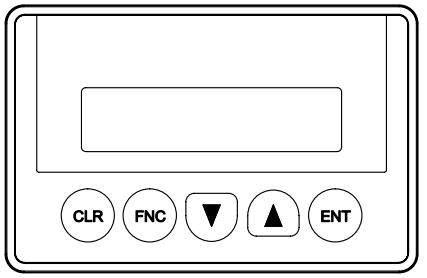

×1

1.5.1 Accessories

1) Common accessories

Packing (made of rubber)

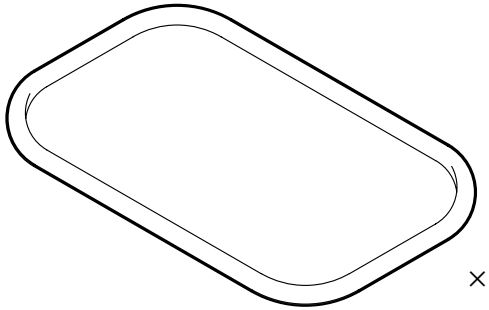

×1

Bracket (made of plastic)

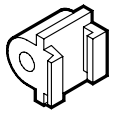

×4

Tightening bolt (M4×25)

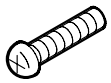

×4

1.5.2 Options

Model name indication

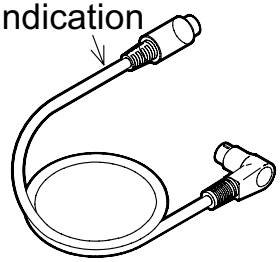

Table 1.1:

Cable model name	Application
FX-20P-CAB0 FX-20P-CAB0/EN	For FX0/FX0S/FX1S/FX0N/FX1N/FX2N/FX2NC Series (with mini-DIN, 8-pin connector)
FX-20P-CAB	For FX1/FX/FX2C Series (with D-sub, 25-pin connector)

Action to comply with the CE marking

Compliance with the EMC requirement is approved with the cable FX-20P-CAB0/EN. For the action to be taken to any other cable, refer to head page.

1.Introduction
2.Specifications
3.Installation
Wiring
Maintenance
4."SYSTEM MODE" Menu
5.Environmental Setting
"MONITOR SET"
"OTHER"
6.Display
"ENTRY MONITOR"
DEVICE MONITOR
7.Attachment
ASCII codes
Setting sheet
Error message list

1.6 Name of each part

The name and function of each part of the 10DM are described below.

1) Front panel

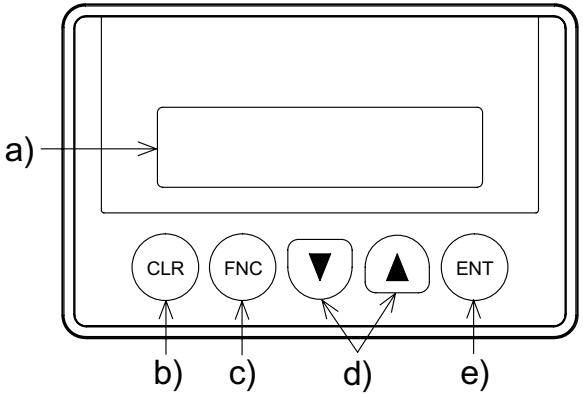

a) Display unit
Displays alphabets, numeric and Katakana characters and symbols in 16 half-width characters by 2 lines.

b) [CLR] key
Clears a device No. or numeric value being input, and returns to the initial status.

c) [FNC] key
Sets the line selection mode when pressed and held for 1 second or more.
While a numeric value is being input, this key specifies the digit.

d) [▲] and [▼] keys
Decrease or increase a device No. or numeric value, and scroll the display line.

e) [ENT] key
Completes input of a device No., numeric value or menu item selection.

2) Rear panel

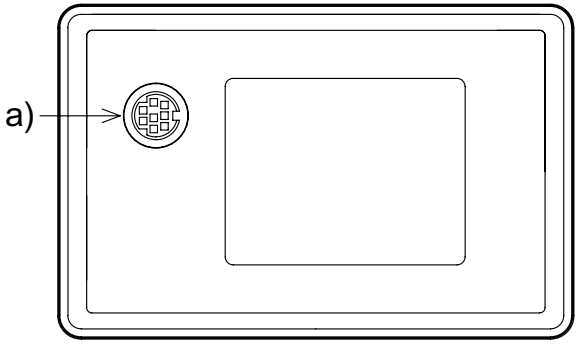

a) Connector for PLC (RS-422 interface)
Enables communication between the 10DM and the FX Series PLC.
The power is supplied from the PLC via a cable connected to this connector.

1.7 Key functions and how to look at device indication

1.7.1 Key functions

The 10DM allows to select and display word devices and change the data using the five keys. Some combinations of the keys offer special functions.

Table 1.2:

Key operation*1	When a line is selected	When a device (numeric value) is selected
[FNC]+[ENT]	Changes over the screen to "SYSTEM MODE". (This function can be prohibited by "OTHER"-"CALL SYSTEM".)	
[FNC]	Changes over the mode to the line selection mode when pressed and held for 1 sec or more.	Allows to specify a digit by the numeric value of the device.
[ENT]	Determines the input (and changes over the mode from the line selection mode to the device selection mode).	Determines the device or completes the input of numeric value.
[▲]	Moves up the function display on the "SYSTEM MODE" menu or shifts upward the display line of "ENTRY MONITOR".	Changes over the device (D→D-D→T→C→) and increases a numeric value. Changes the sign of the data from minus (-) to plus (+).
[▼]	Moves down the function display on the "SYSTEM MODE" menu or shifts downward the display line of "ENTRY MONITOR".	Changes over the device (D→C→T→DD→) and decreases a numeric value. Changes the sign of the data from plus (+) to minus (-).

1.Introduction
2.Specifications
3.Installation
Wiring
Maintenance
4."SYSTEM MODE" Menu
5.Environmental Setting
"MONITOR SET"
"OTHER"
6.Display
"ENTRY MONITOR"
DEVICE MONITOR
7.Attachment
ASCII codes
Setting sheet
Error message list

Table 1.2:

Key operation*1	When a line is selected	When a device (numeric value) is selected
[CLR]	Changes over the line selection mode to the initial status (in which the cursor is not displayed).	Cancels the input.
	Changes over the mode from the line selection mode (in which the cursor "■" flickers) to the device selection mode (in which the cursor "_" is displayed).	Allows to input another device in "DEVICE MONITOR".
[FNC]+[CLR]	Deletes the setting of the line where the cursor is located. "ENTRY MONITOR", "RANGE OK" and "DATA RANGE" in "MONITOR SET"	Reads the reset function.

Cursor display	"■" flickers.	"-" is displayed.

*1 In this manual, "[ ]" indicates a key.

1.7.2 How to look at device indication

Among word devices, data registers (D), timers (T) and counters (C) can be displayed in the 10DM. Data is displayed in decimal numbers.
Such word devices can be displayed using the "device monitor" and "entry monitor" functions.

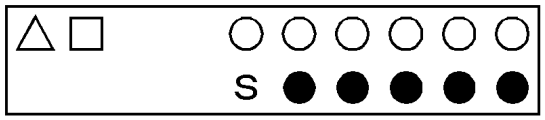

←Current value data (for D, DD, T and C only)
←Set value data (for T and C only)
If there is not any program, " ******" (six asterisks) is displayed.

△ = Device name
□ = Device No.
○ = Data

Display example:

The example below shows display of each device using the "device monitor" function.
The "entry monitor" function can display the device name as comment.

Data register (16-bit type)

Timer

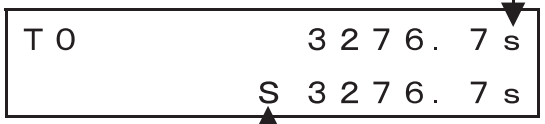

Indicates "second".
Indicates the set value.

Data register (32-bit type) *1

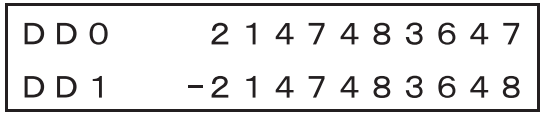

Counter (32-bit type)

Indicates the set value.

Up to two data registers can be displayed. Only one timer or counter can be displayed because both the current value and the set value are displayed for each timer or counter.

*1 The 10DM displays actually " D " for a 16-bit type data register and " D " for a 32-bit type data register. In this manual, a 16-bit type data register is described as "D" and a 32-bit type data register as "DD".

1.Introduction
2.Specifications
3.Installation
Wiring
Maintenance
4."SYSTEM MODE" Menu
5.Environmental Setting
"MONITOR SET"
"OTHER"
6.Display
"ENTRY MONITOR"
DEVICE MONITOR
7.Attachment
ASCII codes
Setting sheet
Error message list

MEMO

2. Specifications

2.1 Outside dimensions

Unit: mm

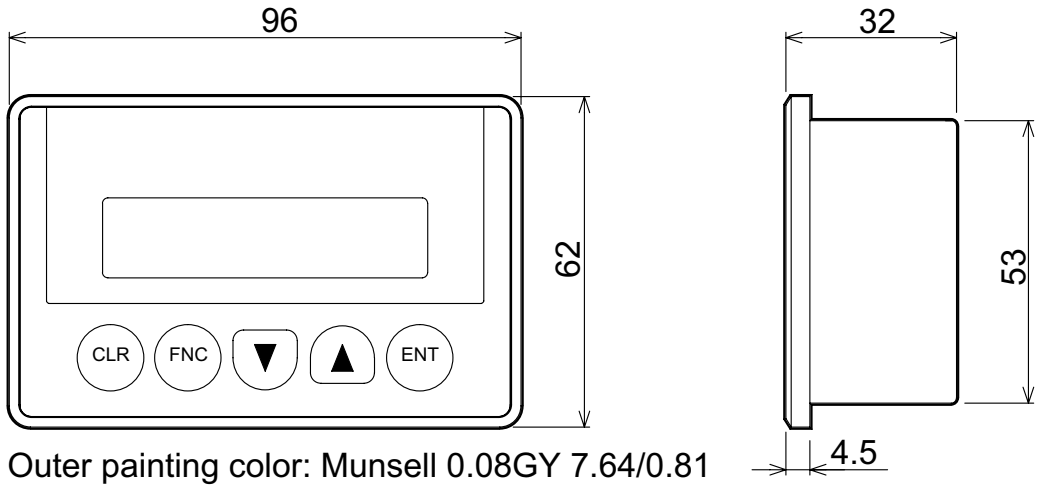

Outer painting color: Munsell 0.08GY 7.64/0.81
Mass: 0.15 kg
For accessories, refer to Paragraph 1.6.

2.2 Power supply specifications

Table 2.1:

Supply voltage	5 V DC ±5% (supplied from FX Series PLC)
Power ripple	200 mV or less
Current consumption (5V DC)	220 mA
Allowable instantaneous power interruption	Operation shall continue against power interruption of less than 5 ms.

1.Introduction
2.Specifications
3.Installation
Wiring
Maintenance
4."SYSTEM MODE" Menu
5.Environmental Setting
"MONITOR SET"
"OTHER"
6.Display
"ENTRY MONITOR"
DEVICE MONITOR
7.Attachment
ASCII codes
Setting sheet
Error message list

2.3 General specifications

Table 2.2:

<table>
<tr><td>Ambient temperature</td><td colspan="5">0 to +50 °C during operation, -20 to +70 °C during storage</td></tr>
<tr><td>Ambient humidity</td><td colspan="5">35 to 85 %RH during operation (Dew condensation shall not be allowed.)</td></tr>
<tr><td>Operating atmosphere</td><td colspan="5">Must be free of lamp black, corrosive gas, flammable gas, or excessive amount of electro-conductive dust particles and must be no direct sunlight. (Same as for saving)</td></tr>
<tr><td rowspan="5">Vibration resistance</td><td></td><td>Frequency</td><td>Acceleration</td><td>Amplitude</td><td rowspan="5">10 times in each of X, Y and Z directions (for 80 min)</td></tr>
<tr><td rowspan="2">When intermittent vibrations are applied</td><td>10 to 57 Hz</td><td>—</td><td>0.075 mm</td></tr>
<tr><td>57 to 150 Hz</td><td>9.8 m/s^2</td><td>—</td></tr>
<tr><td rowspan="2">When continuous vibrations are applied</td><td>10 to 57 Hz</td><td>—</td><td>0.035 mm</td></tr>
<tr><td>57 to 150 Hz</td><td>4.9 m/s^2</td><td>—</td></tr>
<tr><td>Impact resistance</td><td colspan="5">147 m/s^2, 3 times in each of X, Y and Z directions</td></tr>
<tr><td>Noise resistance</td><td colspan="5">By noise simulator of noise voltage 1,000 Vp-p, noise width 1 μs and cycle 30 to 100 Hz</td></tr>
<tr><td>Withstand voltage</td><td colspan="5">500V AC for 1 min (between all power terminals as a whole of PLC and ground terminal)</td></tr>
<tr><td>Insulation resistance</td><td colspan="5">5 MΩ or more by 500V DC Megger (between all power terminals as a whole of PLC and ground terminal)</td></tr>
<tr><td>Protective structure</td><td colspan="5">Equivalent to IP65f *1 (on panel face)</td></tr>
</table>

*1 Though the compatibility is confirmed in the test of IP65f, this test does not guarantee use in all environments.

2.4 Performance specifications

Table 2.3:

Display device and display colors		STN character type liquid crystal, character color: black, background color: yellowish green
Resolution and effective display size		80 × 16 dots, 11.6 × 56.2 mm
Displayed (half-width) characters		16 half-width characters × 2 lines
Visible angle range		30 degrees in left, right, up and down
Operation switches		5 mechanical keys
Built-in memory		EEPROM memory
Life time (average)	Display element	Approximately 50,000 hours or more at room temperature (= 25 °C) and room humidity
	Backlight	Yellowish green, LED backlight type, free from maintenance
External interface		RS-422 1ch

- For the specifications on displayed characters for comments and messages, refer to Paragraph 6.3.2.
- Bright dots (always lit) and dark dots (unlit) may appear on a liquid crystal display panel. It is impossible to completely avoid this symptom, as the liquid crystal display comprises of a great number of display elements. Flickers may be observed depending on the display color. Please note that these dots appear due to its characteristic and are not caused by product defect.
- When the same screen is displayed for a long time, an incidental color or partial discoloration is generated on the screen due to heat damage, and it may not disappear.

1.Introduction
2.Specifications
3.Installation
Wiring
Maintenance
4."SYSTEM MODE" Menu
5.Environmental Setting
"MONITOR SET"
"OTHER"
6.Display
"ENTRY MONITOR"
DEVICE MONITOR
7.Attachment
ASCII codes
Setting sheet
Error message list

2.5 Connectable PLC

The 10DM can be connected to either of the following FX Series PLC units.

Table 2.4:

FX Series PLC	FX_1, FX, FX_{2C} FX_0, FX_{0S}, FX_{1S}, FX_{0N}, FX_{1N}*1, FX_{2N}*1, FX_{2NC}*1

*1 Because the 10DM receives the power of 5V DC from the PLC, attention should be paid depending on the PLC configuration. For the details, refer to the manual of the connected PLC.

2.6 Device setting range (maximum range)

The table below shows the maximum device range which can be handled in the 10DM. However, the available range is actually equivalent to the device specifications range of the connected FX Series PLC.

Table 2.5:

Device name			Maximum setting/display range
Data register	D0 to D7999	16 bits	-32768 to +32767
		32 bits (when used as a pair)	-2147483648 to +2147483647
	D8000 to D8195	16 bits	-32768 to +32767
Timer	T0 to T199	100 ms	0.1 to 3276.7s
	T200 to T245	10 ms	0.01 to 327.67s
	T246 to T249	1 ms integrating type	0.001 to 32.767s
	T250 to T255	100 ms integrating type	0.1 to 3276.7s

Table 2.5:

Device name			Maximum setting/display range
Counter	C0 to C199	16 bits	0 to 32767
	C200 to C255	32 bits	-2147483648 to +2147483647

1.Introduction
2.Specifications
3.Installation
Wiring
Maintenance
4."SYSTEM MODE" Menu
5.Environmental Setting
"MONITOR SET"
"OTHER"
6.Display
"ENTRY MONITOR"
DEVICE MONITOR
7.Attachment
ASCII codes
Setting sheet
Error message list

2.7 Comment and message display specifications

1) Character display specifications

Table 2.6:

Display	Number of characters	Character type	Applicable devices	
Comment	8	Katakana (Japanese), alphabets and symbols	16 bit	T, C, D
	4		32 bit	T, C, DD
Message	16		D, DD	

Katakana characters (Japanese) can be displayed without regard to the setting in "LANGUAGE" in "OTHER".

2) Applicable PLC

Comments can be set in the following PLC.

Table 2.7:

Comment	FX/FX2C/FX1S/FX0N/FX1N/FX2N/FX2NC Series The program memory of the PLC should have sufficient free capacity to store comments.
Message	All FX Series

3) Restriction in display

The comment and the data are displayed in 1 line (16 characters) as shown below. This example shows a case in which DD100 is set and the comment "CONTROL" is displayed.
If the data overlaps the comment, the priority is given to the data.

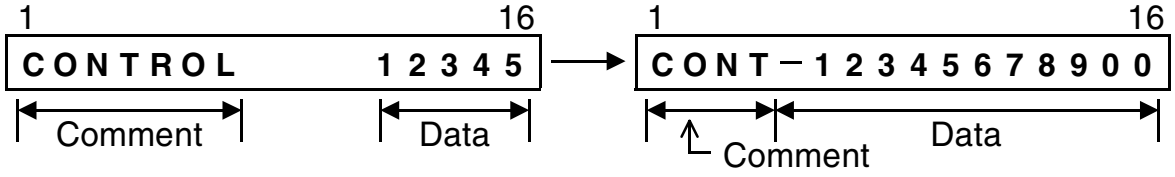

3. Installation, Wiring and Maintenance

This section describes the panel processing, installation and wiring procedures for the 10DM.

3.1 Installation

The 10DM is to be embedded on the panel face. Install it using the following procedure.

1) Dimensions inside the panel required for installation
   Consider the dimensions inside the panel shown in the right, then process the mounting panel face and install the 10DM.
   a) PLC connection cable
   b) Packing
   c) Bracket

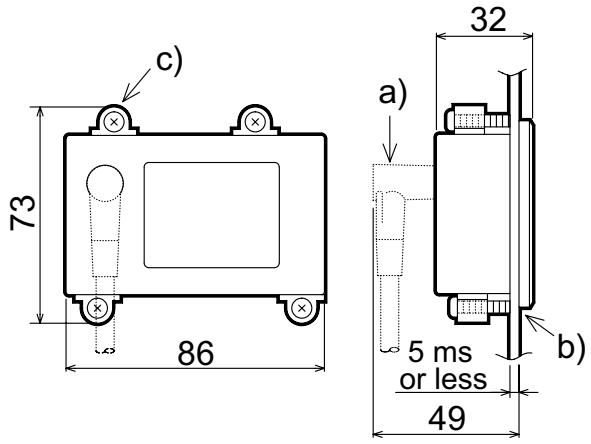

2) Processing the mounting panel face
   Drill the rectangular area shown in the left on the panel face. At this time, as shown in the figure in 1) above, the space for brackets (10 mm) is required above and below the mounting area.
   * Make sure that the mounting panel face thickness is 5 mm or less.

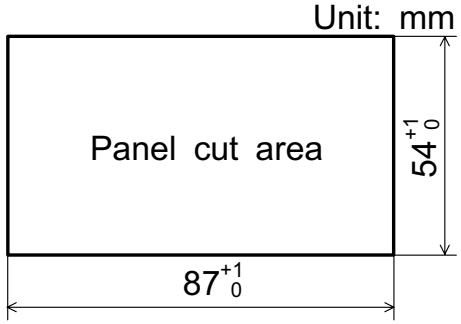

1.Introduction
2.Specifications
3.Installation
Wiring
Maintenance
4."SYSTEM MODE" Menu
5.Environmental Setting
"MONITOR SET"
"OTHER"
6.Display
"ENTRY MONITOR"
DEVICE MONITOR
7.Attachment
ASCII codes
Setting sheet
Error message list

3) Inserting the 10DM into the panel face
Attach a packing to the 10DM, and insert it into the front face of the panel face.
a) 10DM main body
b) Packing
c) Mounting area

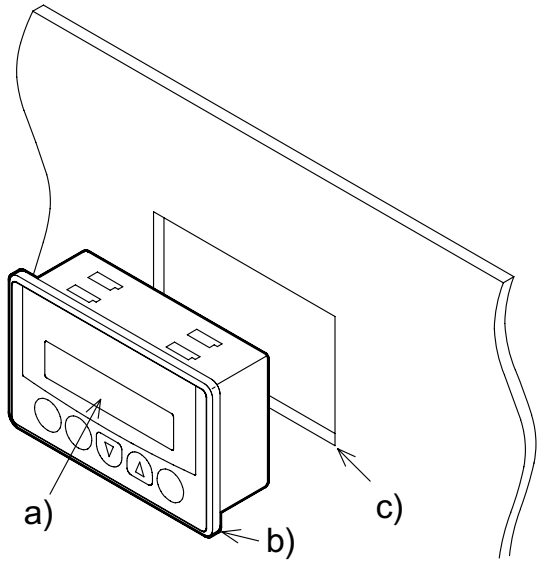

4) Preparing the brackets
Attach a tightening bolt b) (offered as accessory) to each bracket a) (offered as accessory) as shown in the right while paying attention to the direction.

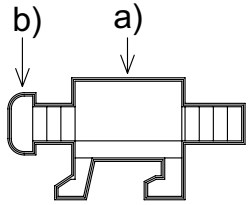

5) Fixing the 10DM

A) Insert the hook of each bracket (offered as accessory) into the mounting hook hole of the 10DM, and pull the hook toward you.

B) Slide leftward each bracket, and fix it.

C) Tighten the screw until it is fixed with the tightening bolt (offered as accessory).

Fix the 10DM at four points (2 points at the top, and 2 points at the bottom).

a) Bracket with tightening bolt

* Make sure that the tightening torque for the tightening bolt is 0.18 to 0.22 N·m.

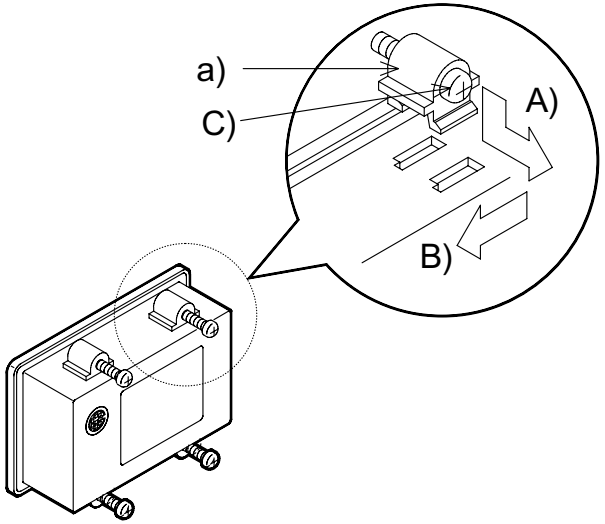

1.Introduction
2.Specifications
3.Installation
Wiring
Maintenance
4."SYSTEM MODE" Menu
5.Environmental Setting
"MONITOR SET"
"OTHER"
6.Display
"ENTRY MONITOR"
DEVICE MONITOR
7.Attachment
ASCII codes
Setting sheet
Error message list

3.2 Wiring

3.2.1 Connection of cable

Connect the 10DM to the FX Series PLC with a cable offered as option.
Connect the L-shape connector of the cable to the RS-422 connector provided on the rear panel of the 10DM, and connect the other connector to the programming connector of the FX Series PLC. Because the power is supplied from the PLC to the 10DM through this cable, wiring for power supply is not required.

Connection procedure

1) Connecting the cable to the 10DM
   Hold the mini-DIN, 8-pin, L-shape connector of the accessory cable (FX-20P-CAB or FX-20P-CAB0/EN) by hand. Align the "▲" mark with the direction of the notch on the connector for PLC of the 10DM, and securely insert the connector completely.

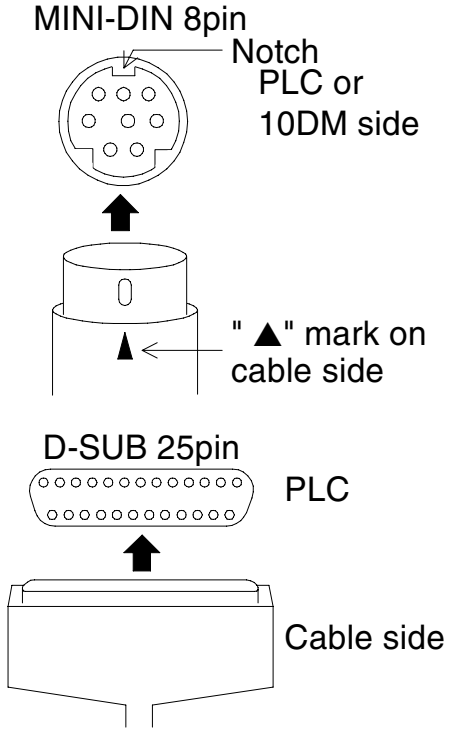

2) Connecting the cable to the PLC

In the case of FX-20P-CAB

Hold the other D-sub, 25-pin connector of the cable FX-20P-CAB0/EN by hand. Let the connector be in the lateral direction and its longer edge be located on the upper side, securely insert it completely.

In the case of FX-20P-CAB0 and FX-20P-CAB0/EN

Hold the other mini-DIN, 8-pin connector of the cable FX-20P-CAB0/EN by hand. Align the "▲" mark with the direction of the notch on the programming connector of the PLC, and securely insert the connector completely.

3) Fix the cable securely so that it will not come off the 10DM.

1.Introduction
2.Specifications
3.Installation
Wiring
Maintenance
4."SYSTEM MODE" Menu
5.Environmental Setting
"MONITOR SET"
"OTHER"
6.Display
"ENTRY MONITOR"
DEVICE MONITOR
7.Attachment
ASCII codes
Setting sheet
Error message list

- Connection examples of FX Series PLC

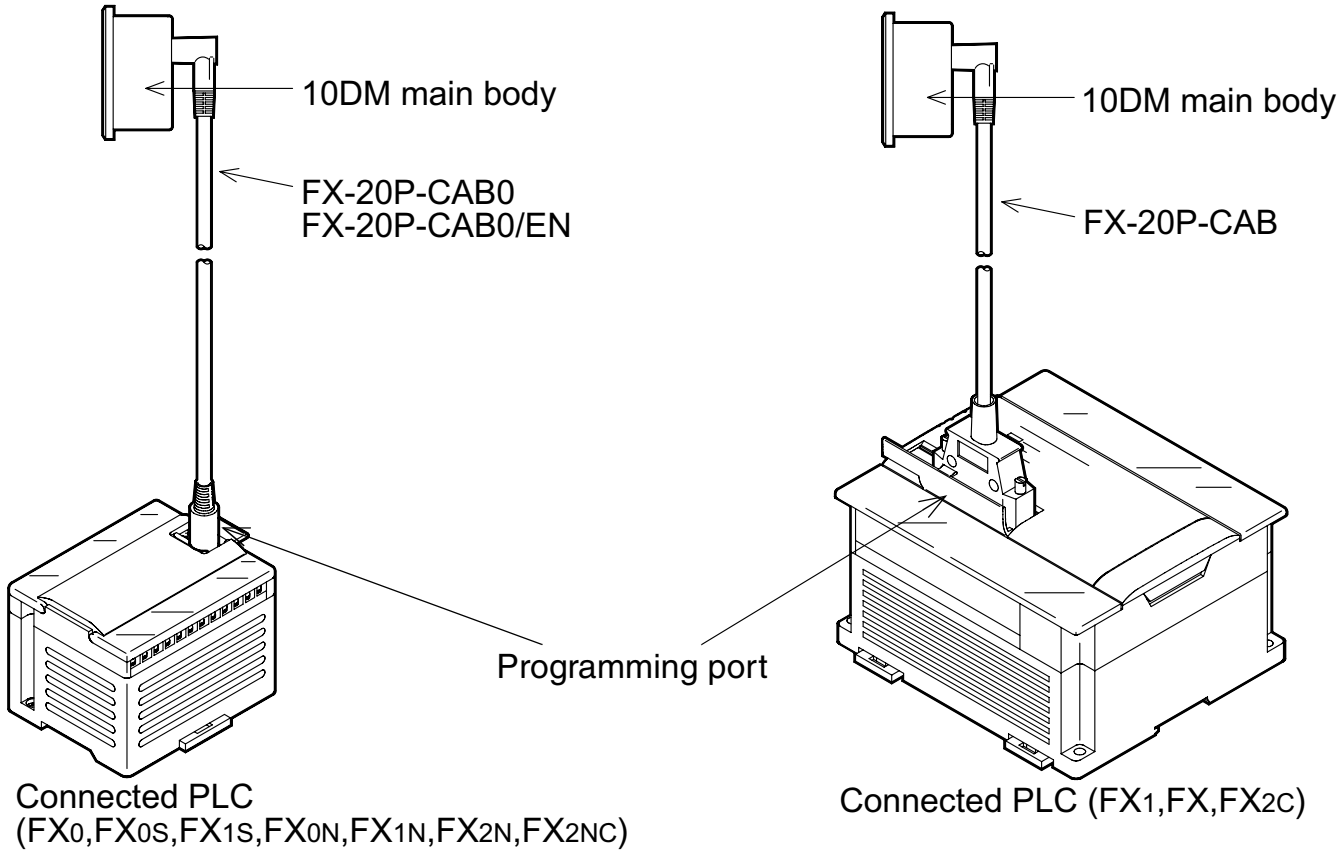

3.2.2 Cautions on connection

1) 5 V power supply of the FX Series PLC
   The current consumption of the 10DM is 220 mA / 5V DC.
   When connecting a special extension block to the FX Series PLC base unit, consider the total supply current of the 5V DC power supply.
   If the total supply current exceeds the allowable capacity, the 10DM cannot be connected.
2) Operation of the 10DM after instantaneous power interruption
   The 10DM continues its operation against instantaneous power interruption of 5 ms or less. If long power interruption of voltage drop has occurred, the 10DM stops its operation. And when the power is recovered, the 10DM restarts its operation automatically.

3.3 Maintenance

The 10DM is not equipped with built-in consumable parts which restrain the life time such as a battery and backlight.

- Because the 10DM adopts the EEPROM memory, it is not equipped with a built-in battery.
- The backlight is the LED type, and free from maintenance.

1.Introduction
2.Specifications
3.Installation
Wiring
Maintenance
4."SYSTEM MODE" Menu
5.Environmental Setting
"MONITOR SET"
"OTHER"
6.Display
"ENTRY MONITOR"
DEVICE MONITOR
7.Attachment
ASCII codes
Setting sheet
Error message list

MEMO

4. "SYSTEM MODE" Menu

The "SYSTEM MODE" menu allows diversified settings of the 10DM.
This menu offers "1: ENTRY MONITOR", "2: DEVICE MONITOR" for display, and "3: MONITOR SET" and "4: OTHER" for environmental setting.

1.Introduction
2.Specifications
3.Installation
Wiring
Maintenance
4."SYSTEM MODE" Menu
5.Environmental Setting
"MONITOR SET"
"OTHER"
6.Display
"ENTRY MONITOR"
DEVICE MONITOR
7.Attachment
ASCII codes
Setting sheet
Error message list

4.1 Menu list

When you turn on the power while pressing and holding the [FNC] + [ENT] keys in the power OFF status, the "SYSTEM MODE" menu appears.
Change the numeric value with the cursor "SYSTEM MODE" menu by pressing the [▲] and [▼] keys to select a menu item. Then, press the [ENT] key to determine the selection.

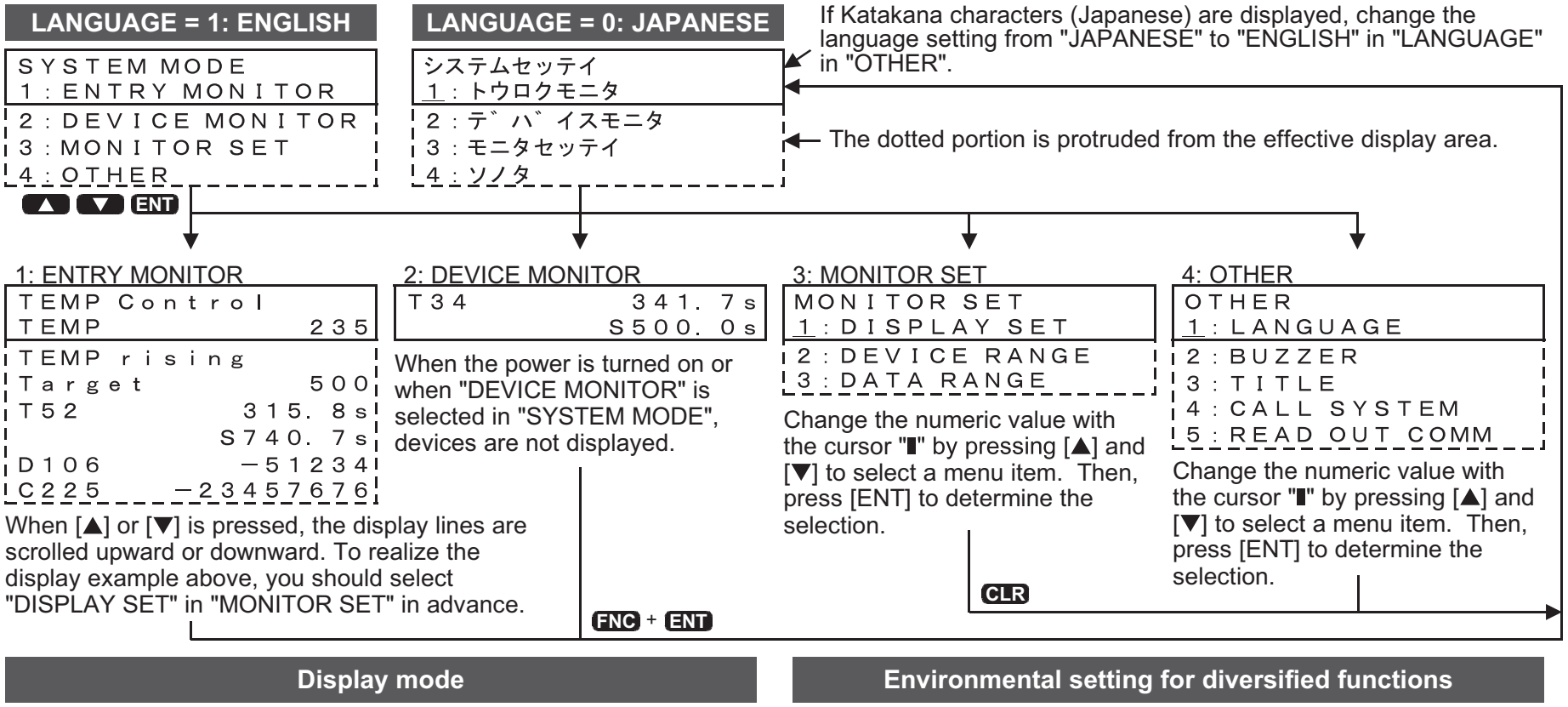

4.2 Functions offered in 10DM

The table below shows all functions for display and environmental setting offered in the 10DM. For the detailed contents of display and setting, refer to the corresponding reference paragraph.

Table 4.1:

Classification	Display	Description on major functions	Reference
Display	1: ENTRY MONITOR	Allows to set, in the unit of line, monitoring of up to 8 items among the messages, comments (in Katakana characters) and word devices (D, T and C) set by the user. Allows to change the current value (D, T and C) and the set value (T and C) of word devices. • Message Arbitrary characters (ASCII codes) are displayed in data registers (D) of the PLC. • Comment Comments (referred to as "Katakana comments" or "device comments" depending on the sequence programming tool) created by the sequence programming tool are displayed.	6.2
	2: DEVICE MONITOR	Allows to select word devices (D, T and C) of the PLC, and monitor and change the current value (D, T and C) and the set value (T and C). Up to 2 data registers (D), 1 timer (T) or 1 counter (C) can be monitored at a time.	6.4

1.Introduction
2.Specifications
3.Installation
Wiring
Maintenance
4."SYSTEM MODE" Menu
5.Environmental Setting
"MONITOR SET"
"OTHER"
6.Display
"ENTRY MONITOR"
DEVICE MONITOR
7.Attachment
ASCII codes
Setting sheet
Error message list

Table 4.1:

Classification	Display	Description on major functions	Reference
Environmental setting	3: MONITOR SET	1) "ENTRY MONITOR" allows to set devices for displayed messages and comments. 2) "2: DEVICE RANGE" allows to set "ERROR-ALL DEV", "RANGE OK (up to 8 points)" or "ALL OK" for word devices which can be changed. 3) "3: DATA RANGE" allows to set "ERROR-ALL DEV", "RANGE OK (up to 8 points)" or "ALL OK" for the word device range and the numeric value range available for the current value and the set value of word devices.	5.2
	4: OTHER	1) "LANGUAGE" allows to change over the language for system settings between Japanese and English. 2) "BUZZER" allows to turn on and off issue of the key pressing confirmation buzzer. 3) "TITLE" allows to display or hide the title screen (which indicates the product model name, the copyright, etc.). 4) "ALL SYSTEM" allows to enable or disable the changeover to the system setting by pressing of keys. 5) "READ OUT COMM" searches for the comment information for the PLC.	5.5

5. Environmental Setting Function

This section describes the functions of "3: MONITOR SET" and "4: OTHER" which allow to set the operating environment of the display functions of the 10DM.

5.1 Menu display

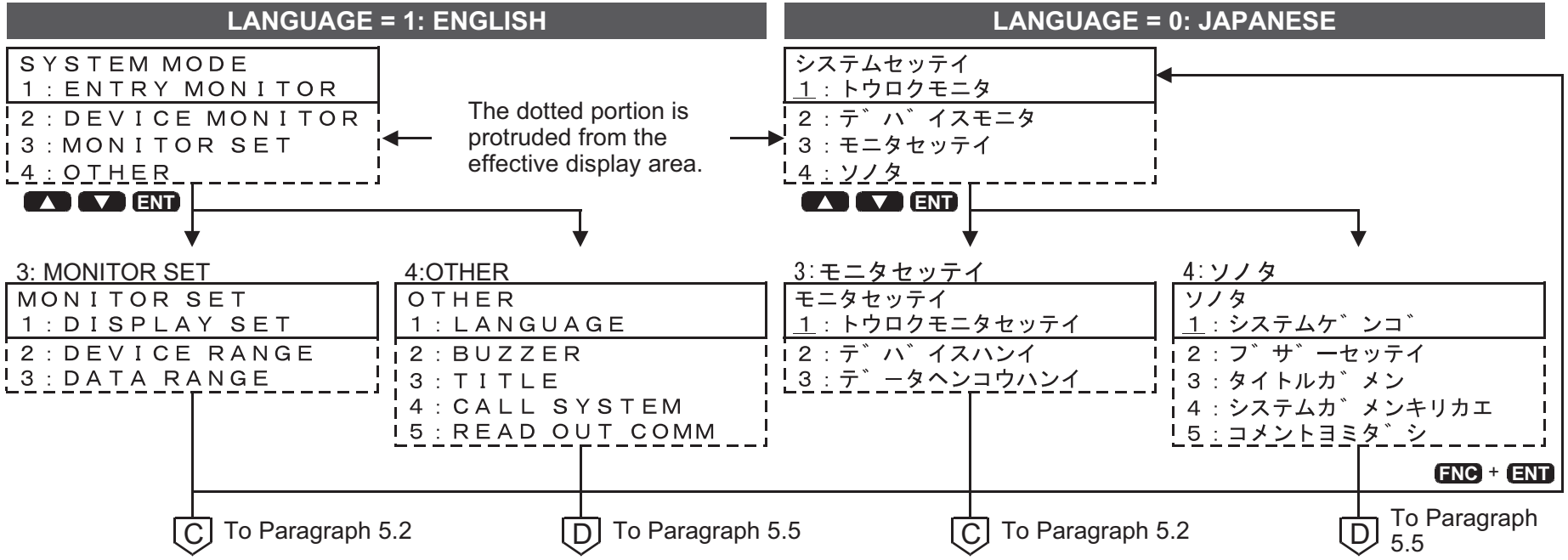

5.2 "MONITOR SET"

"3: MONITOR SET" allows to set the contents (specification of devices for messages and comments) displayed in "1: ENTRY MONITOR".
In addition, "3: MONITOR SET" allows to set restriction in the word device range in which the data can be changed and the numeric value range which can be input in "1: ENTRY MONITOR" and "2: DEVICE MONITOR".

Table 5.1:

Display	Description on function	Reference paragraph
1: DISPLAY SET	Allows to set up to 8 devices for messages and comments displayed in "1: ENTRY MONITOR".	6.3.3

Table 5.1:

Display	Description on function	Reference paragraph
2: DEVICE RANGE	Allows to set the range*1 of word devices in which the data can be changed. [Setting] **0: ALL OK** Data values can be changed in all devices. 1: RANGE OK You can set arbitrarily up to 8 device Nos. 2: ERROR-ALL DEV. Data values cannot be changed in any device.	5.3
3: DATA RANGE	Allows to set the range*1 of word devices in which the data can be changed and set the range of numeric values which can be input as the data (current values and set values). [Setting] **0: ALL OK** There is no restraint in input data values. 1: RANGE OK You can set arbitrarily up to 8 numeric values which can be input as the data. 2: ERROR-ALL DEV. Data values cannot be changed in any device.	5.4

*1 The maximum word device range is actually the device specifications range of the connected FX Series PLC.

1.Introduction
2.Specifications
3.Installation
Wiring
Maintenance
4."SYSTEM MODE" Menu
5.Environmental Setting
"MONITOR SET"
"OTHER"
6.Display
"ENTRY MONITOR"
DEVICE MONITOR
7.Attachment
ASCII codes
Setting sheet
Error message list

5.3 "DEVICE RANGE"

Set the word device range in which the data can be changed in "1: ENTRY MONITOR" and "2: DEVICE MONITOR".
You can set restriction in the device range in which the data can be input.
The setting which gives restriction can be set only to either one between "DEVICE RANGE" and "DATA RANGE". Either one should be set to "0: ALL OK".

5.3.1 Description on setting screen and displayed contents

This paragraph describes the contents displayed on the "RANGE OK" screen in "DEVICE RANGE".

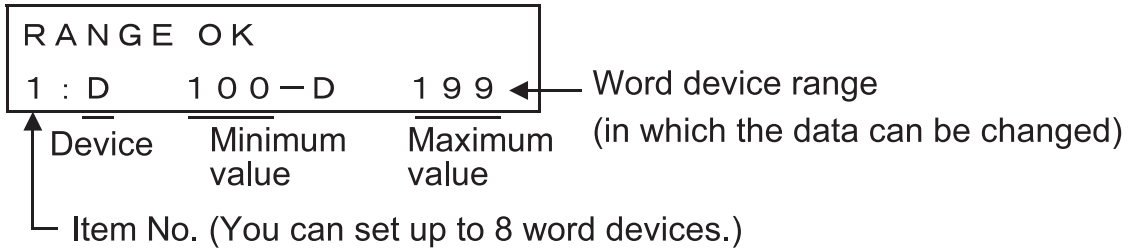

The minimum value and the maximum value of the item No. which are once set are overwritten.
Change of only the maximum value is not available.
The setting can be deleted in the unit of item No.

5.3.2 Operating procedure for "DEVICE RANGE"

The example below shows a case in which "D1000 to D2000" set to the item No. 1 in "RANGE OK" in "DEVICE RANGE" is changed to "D0 to D1000".

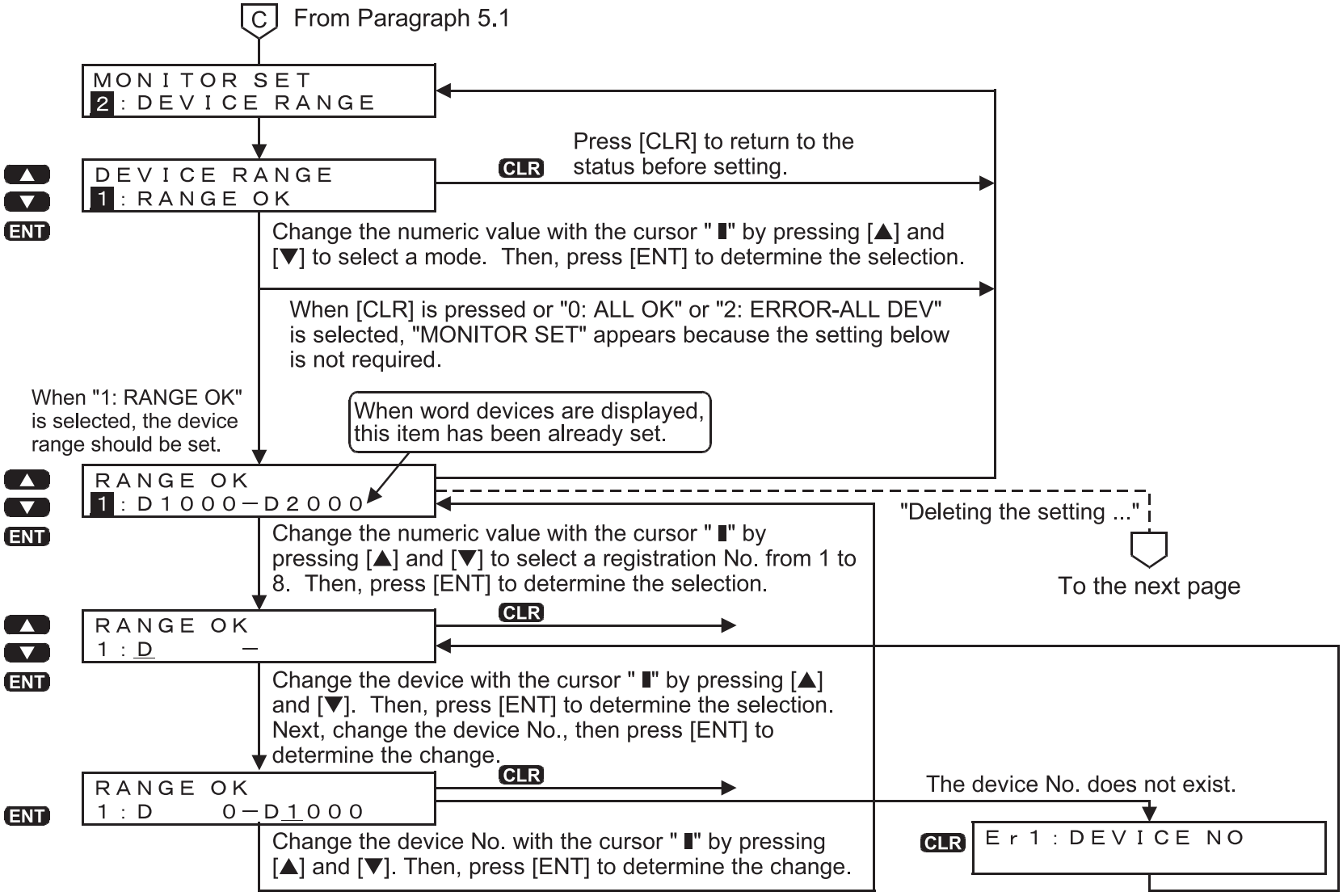

1.Introduction
2.Specifications
3.Installation
Wiring
Maintenance
4."SYSTEM MODE" Menu
5.Environmental Setting
"MONITOR SET"
"OTHER"
6.Display
"ENTRY MONITOR"
DEVICE MONITOR
7.Attachment
ASCII codes
Setting sheet
Error message list

Deleting the setting in "DEVICE RANGE" and "DATA RANGE"

To delete the setting, press the [FNC] key, the press the [CLR] key soon while the cursor "▮" is flickering in a number indicating the device No.

The example below shows the screen display while "RANGE OK" is being set.

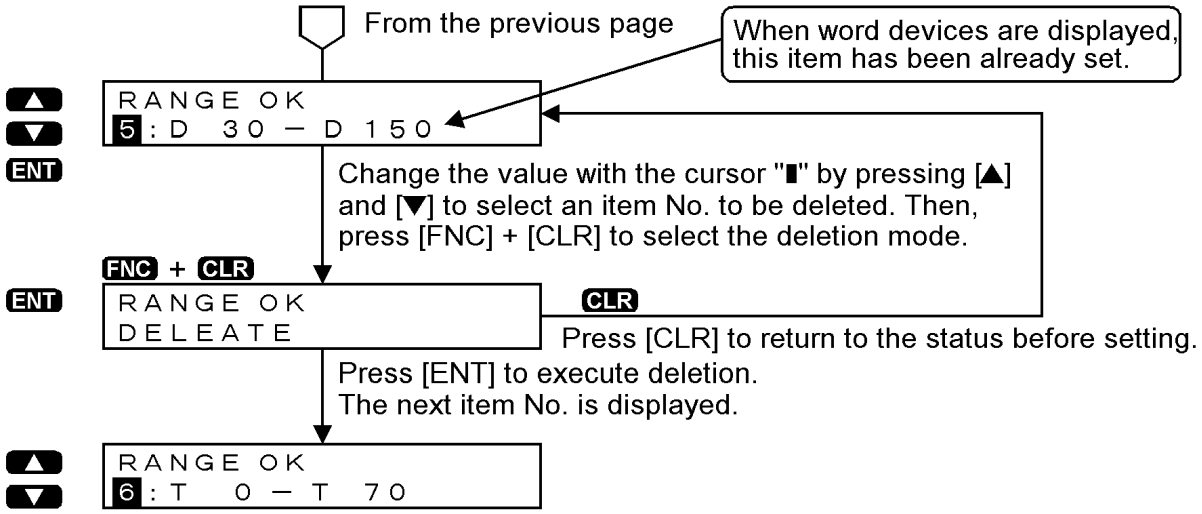

5.4 "DATA RANGE"

Set the word device range in which the data can be changed and the data range which can be input to word devices in "1: ENTRY MONITOR" and "2: DEVICE MONITOR".
You can set restriction in the word device range in which the data can be changed (in the same way as "DEVICE RANGE" described in the previous paragraph) and the data range which can be input to word devices.
The setting which gives restriction can be set only to either one between "DATA RANGE" and "DEVICE RANGE". Either one should be set to "0: ALL OK".

5.4.1 Description on setting screen and displayed contents

This paragraph describes the contents displayed on the "RANGE OK" screen in "DATA RANGE".

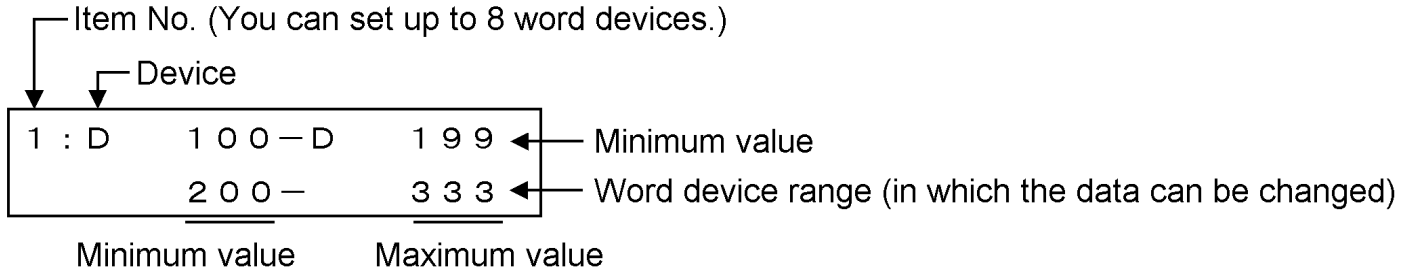

The minimum value and the maximum value of the item No. which are set once are overwritten. Change of only the maximum value is not available.
The setting can be deleted in the unit of item No. (For the detailed operating procedure, refer to "DEVICE RANGE".)

1.Introduction
2.Specifications
3.Installation
Wiring
Maintenance
4."SYSTEM MODE" Menu
5.Environmental Setting
"MONITOR SET"
"OTHER"
6.Display
"ENTRY MONITOR"
DEVICE MONITOR
7.Attachment
ASCII codes
Setting sheet
Error message list

5.4.2 Operating procedure for "DATA RANGE"

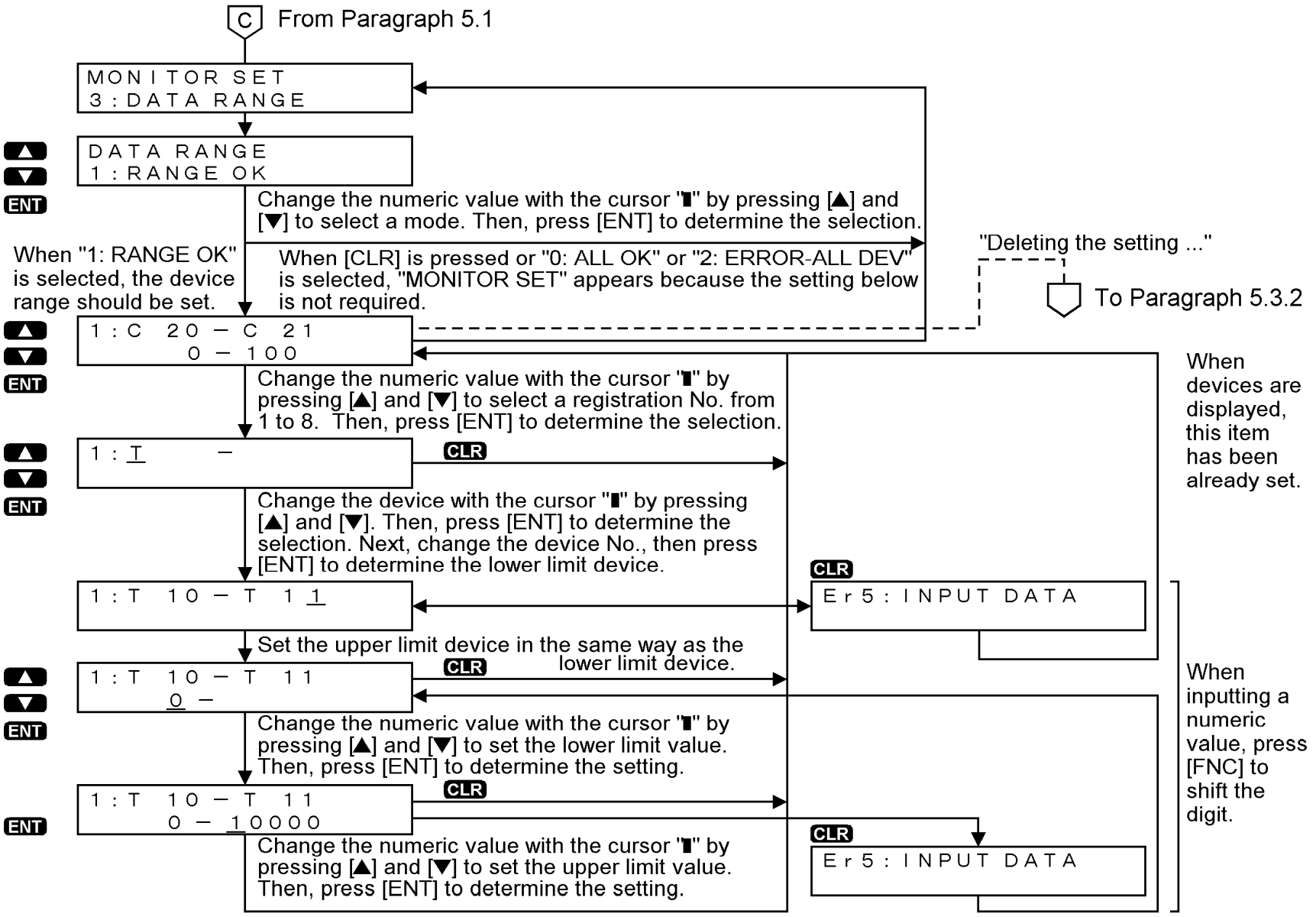

5.5 "OTHER"

"4: OTHER" allows to set the operating environment of the 10DM.

Table 5.2:

Display	Description on major functions
1: LANGUAGE	Allows to set the language used to display each menu item of "SYSTEM MODE", error messages, etc. [Setting] **0:ENGLISH** 1: JAPANESE
2: BUZZER	Allows to set the buzzer sound (issued once) to confirm pressing of a key on the panel face and the buzzer sound for error (issued consecutively twice). [Setting] **0: ON** 1: OFF
3: TITLE	Allows to set the title screen displayed when the power of the 10DM is turned on. [Setting] **0: ON (Displays the copyright, the product model name and the version information.)** 1: OFF (Displays only the version information.)

1.Introduction
2.Specifications
3.Installation
Wiring
Maintenance
4."SYSTEM MODE" Menu
5.Environmental Setting
"MONITOR SET"
"OTHER"
6.Display
"ENTRY MONITOR"
DEVICE MONITOR
7.Attachment
ASCII codes
Setting sheet
Error message list

Table 5.2:

Display	Description on major functions
4: CALL SYSTEM	Allows to enable or disable the changeover to the "SYSTEM MODE" menu by pressing of keys. [Setting] **0: OK (Enables the changeover by pressing [FNC] + [ENT].)** 1: NO (Disables the changeover by pressing [FNC] + [ENT].)
5: READ OUT COMM	Searches for and stores the information on the location of the comment of a device to be displayed with regard to the comment written in the program area of the PLC. (Characters of the comment are not read out.) [Setting] 0: READ (Reads out the comment.) **1: CANCEL (Does not read out the comment.)**

"5: READ OUT COMM" is effective in the "1: ENTRY MONITOR" display.

5.5.1 Operating procedure for "OTHER"

Change the numeric value with the cursor "▮" position by pressing the [▲] and [▼] keys to select a menu item. Then, press the [ENT] key to determine the selection.

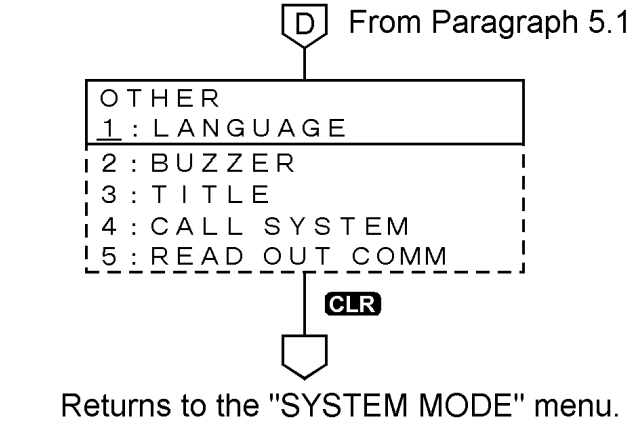

1: LANGUAGE

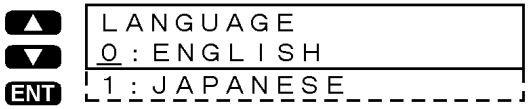

2: BUZZER

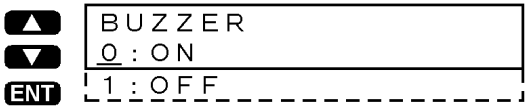

3: TITLE

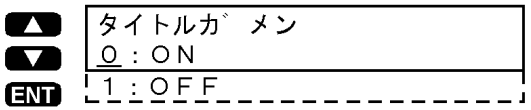

4: CALL SYSTEM

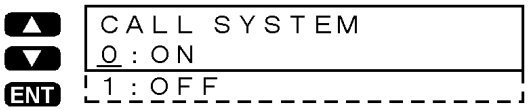

5: READ OUT COMM

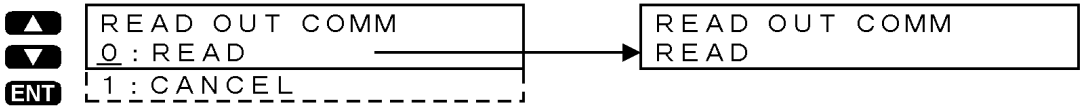

1.Introduction
2.Specifications
3.Installation
Wiring
Maintenance
4."SYSTEM MODE" Menu
5.Environmental Setting
"MONITOR SET"
"OTHER"
6.Display
"ENTRY MONITOR"
DEVICE MONITOR
7.Attachment
ASCII codes
Setting sheet
Error message list

MEMO

6. Display Function

The 10DM can offer display by "1: ENTRY MONITOR" and "2: DEVICE MONITOR".

6.1 Description on menu display and functions

Change the numeric value with the cursor "▮" by pressing the [▲] and [▼] keys to select a menu item. Then, press the [ENT] key to determine the selection.

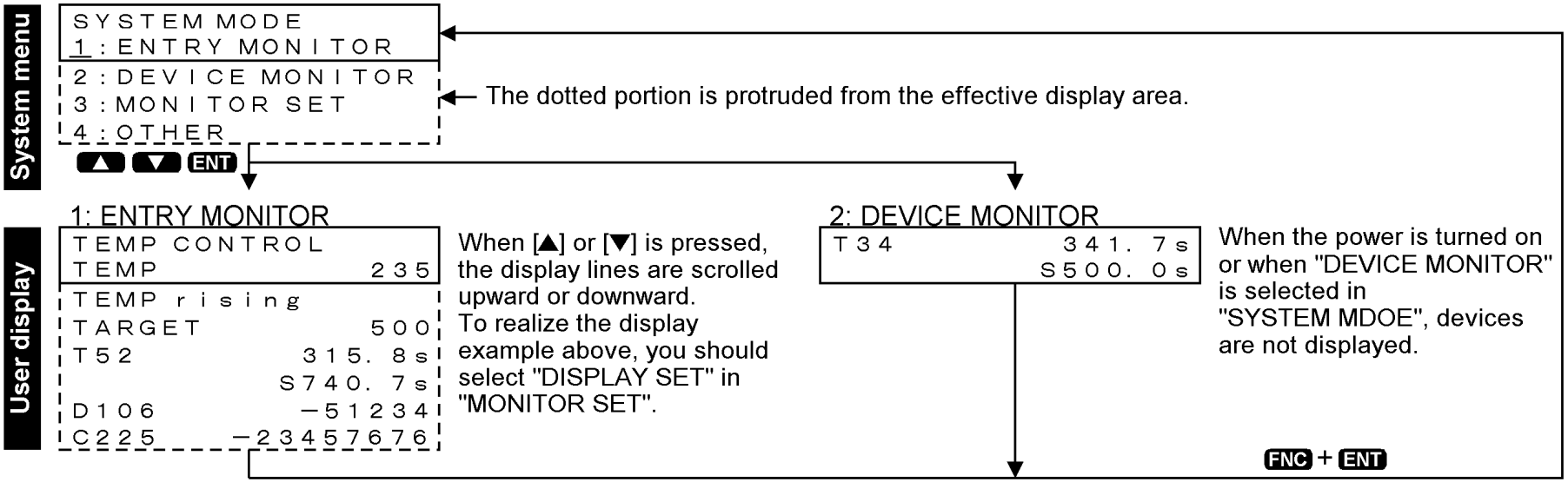

The user display selects and displays the contents set by the user and the devices displayed by key operations.

1.Introduction
2.Specifications
3.Installation
Wiring
Maintenance
4."SYSTEM MODE" Menu
5.Environmental Setting
"MONITOR SET"
"OTHER"
6.Display
"ENTRY MONITOR"
DEVICE MONITOR
7.Attachment
ASCII codes
Setting sheet
Error message list

1) How to specify the contents to be displayed when the power of the 10DM is turned on
The contents displayed when "1: ENTRY MONITOR" or "2: DEVICE MONITOR" is selected on the "SYSTEM MODE" menu then the power is turned off are stored, then displayed when the power is turned on next time.

2) How to display the "SYSTEM MODE" menu
Press the [FNC] and [ENT] keys at the same time.
If display of the "SYSTEM MODE" menu is prohibited by the environmental setting, perform the following operation:
Turn off the power of the 10DM.
While pressing and holding the [FNC] and [ENT] keys at the same time, turn on the power.

6.2 "ENTRY MONITOR"

"1: ENTRY MONITOR" displays messages and comments registered in advance as well as device names and data.

Table 6.1:

Display	Description on functions
1: ENTRY MONITOR	Allows to specify, in the unit of line, up to 8 items of display in the form of messages, comments (in Katakana characters) and word devices (D, T and C). Allows to change the current value (D, T and C) and the set value (T and C) of word devices. Only two lines can be displayed at a time. You can scroll the display lines upward by pressing the [▲] key, and downward by pressing the [▼] key.

1.Introduction
2.Specifications
3.Installation
Wiring
Maintenance
4."SYSTEM MODE" Menu
5.Environmental Setting
"MONITOR SET"
"OTHER"
6.Display
"ENTRY MONITOR"
DEVICE MONITOR
7.Attachment
ASCII codes
Setting sheet
Error message list

Display example:

The monitor data displayed with "device name", "comment", etc. can be changed over to "message display" by a program in the PLC.

This function is useful to messages on completion and error indication.

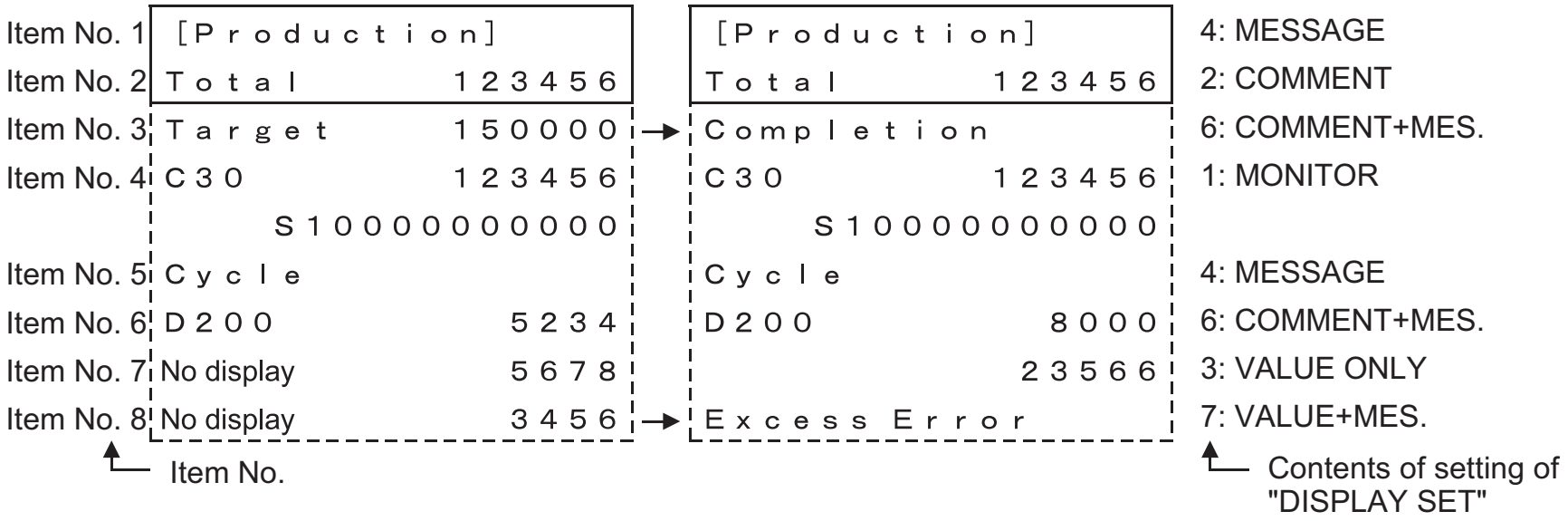

In the display example above, the item No. 6 indicates an example in which only a device is displayed because there are not comment and message data.

6.3 Display setting procedure

1) Understand the display specifications. (Paragraph 6.3.1)
   Check the contents of setting and display available in the "ENTRY MONITOR" display.
2) Design the display layout. (Attachment 7.2)
   Write the desired display layout on the "ENTRY MONITOR" setting sheet.
   In addition, write devices used in the setting and their occupation range.
3) Design the character display specifications. (Paragraph 2.7)
   Learn the specifications of comments and messages and the restriction in display.
4) Check the 10DM setting screen. (Paragraph 6.3.2)
   Read the explanation on the "ENTRY MONITOR" setting screen.
5) Understand operations of the 10DM. (Paragraph 6.3.3)
   Learn operations on the "ENTRY MONITOR" setting screen.
6) Create comments. (Paragraph 6.3.4)
   Register comments using the programming tool.
7) Create messages. (Paragraph 6.3.5)
   Learn how to specify characters to be displayed using a sequence program.
8) Refer to the setting program example. (Paragraph 6.3.6)
   Set actually the display example.

1.Introduction
2.Specifications
3.Installation
Wiring
Maintenance
4."SYSTEM MODE" Menu
5.Environmental Setting
"MONITOR SET"
"OTHER"
6.Display
"ENTRY MONITOR"
DEVICE MONITOR
7.Attachment
ASCII codes
Setting sheet
Error message list

6.3.1 Contents of setting and display in 10DM

This paragraph describes the contents of setting and display available in "ENTRY MONITOR" in the 10DM. Either numeric value inside a circle can be selected and displayed. The symbol "—" indicates that the contents cannot be displayed.

Table 6.2:

Contents of setting	Device	Comment	Message
1: MONITOR	✓Device name + Data	—	—
2: COMMENT	①Device name + Data*1	②	—
3: VALUE ONLY	✓Data only	—	—
4: MESSAGE	—	—	✓
5: MONITOR+MES.	✓Device name + Data	—	②
6: COMMENT+MES.	①Device name + Data*1	②	③
7: VALUE+MES.	①Data only	—	②

*1 If there is not a comment, only the device name is displayed.

1: MONITOR Target devices: T, C, D and DD

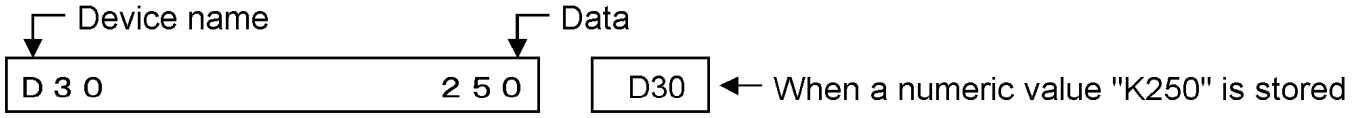

The device name and the data are displayed. The preset word device (D34 in this example) is displayed.
A timer or counter is displayed in 2 lines. For the details, refer to the description on device monitor display. Any sequence program is not required.

2: COMMENT Target devices: T, C, D and DD

In the comment setting, set D30 to "QUANTITY".

The comment and the data are displayed.
The comment of the preset word device (D30 in this example) is displayed. If there is not a comment, the device name is displayed (in the same way as "1: MONITOR" above).
Set the comment to D30 using the sequence programming tool, then transfer it to the PLC.

3: VALUE ONLY Target devices: T, C, D and DD

Only the data is displayed. Only the data of the preset word device is displayed.
Any sequence program is not required.

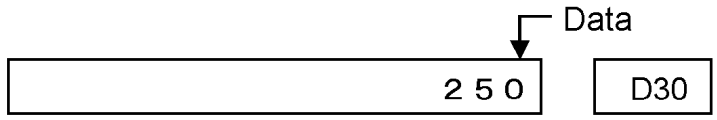

When a numeric value "K250" is stored

4: MESSAGE Target devices: D and DD

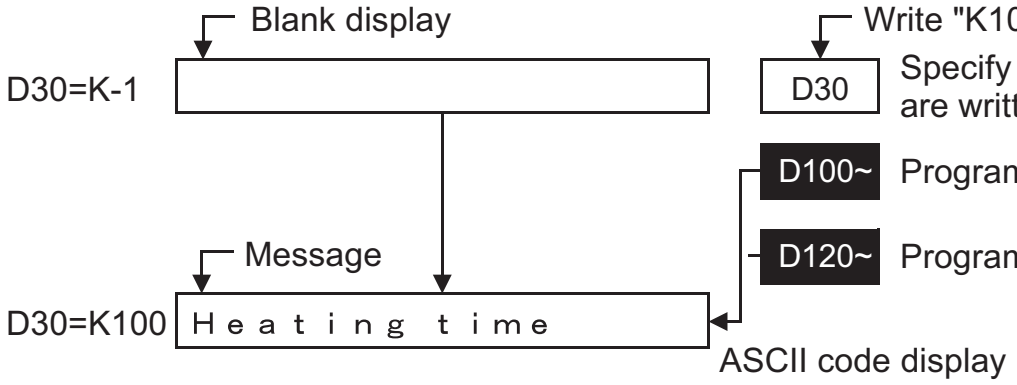

1.Introduction
2.Specifications
3.Installation
Wiring
Maintenance
4."SYSTEM MODE" Menu
5.Environmental Setting
"MONITOR SET"
"OTHER"
6.Display
"ENTRY MONITOR"
DEVICE MONITOR
7.Attachment
ASCII codes
Setting sheet
Error message list

A message of up to 16 characters can be displayed.
The comment (in ASCII codes) stored in the data register No. written in the preset word device is displayed.
By writing to D30 the data register No. corresponding to the message to be displayed, you can change over the displayed message.
If "K-1" is written, nothing is displayed (blank display).
Program the device No. storing the message and the ASCII codes for the message in the sequence program.

5: MONITOR+MES. Target devices: D and DD

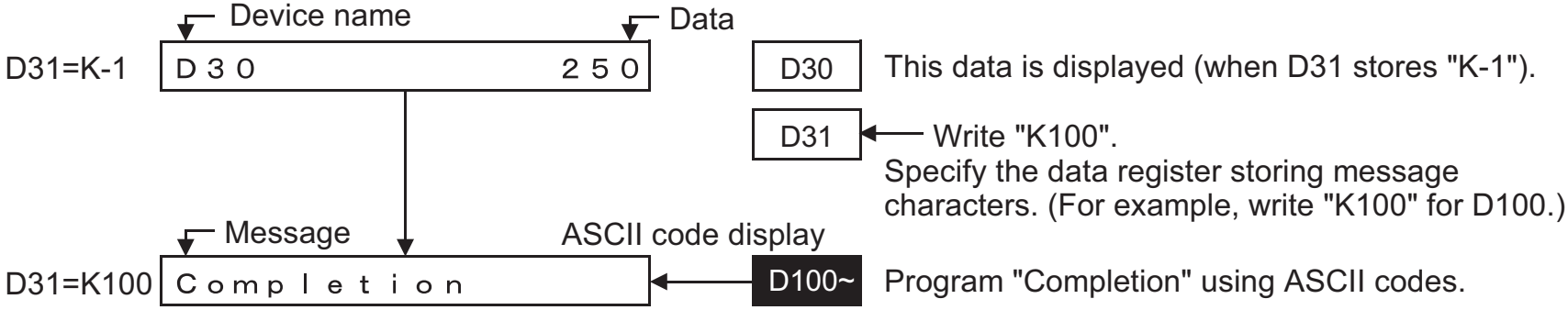

The device and the data are displayed, then the displayed contents can be changed over to a message.
If D31 stores "K-1", the device name and the data are displayed (in the same way as "1: MONITOR" above).
Program the device No. to be displayed and the ASCII codes for the message in the sequence program.

6: COMMENT+MES. Target devices: D and DD

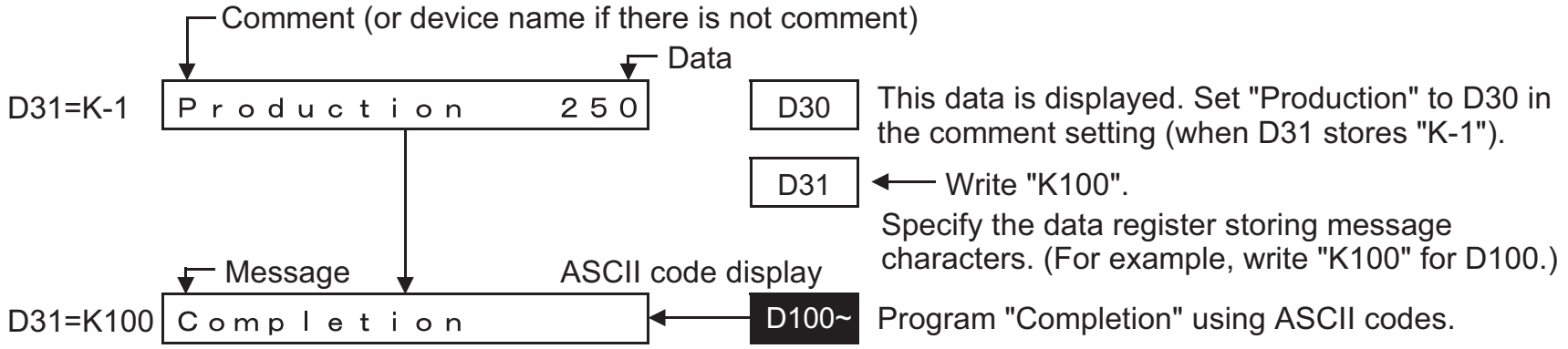

The comment, the device and the data are displayed, and the displayed contents can be changed over to a message.
If D31 stores "K-1", the comment and the data are displayed (in the same way as "2: COMMENT" above). If there is not comment, the device name and the data are displayed (in the same way as "1: MONITOR" above).
Program the device No. storing the message and the ASCII codes for the message in the sequence program.
Set comment to D30 using the sequence programming tool, and transfer it to the PLC.

1.Introduction
2.Specifications
3.Installation
Wiring
Maintenance
4."SYSTEM MODE" Menu
5.Environmental Setting
"MONITOR SET"
"OTHER"
6.Display
"ENTRY MONITOR"
DEVICE MONITOR
7.Attachment
ASCII codes
Setting sheet
Error message list

7: VALUE+MES. Target devices: D and DD

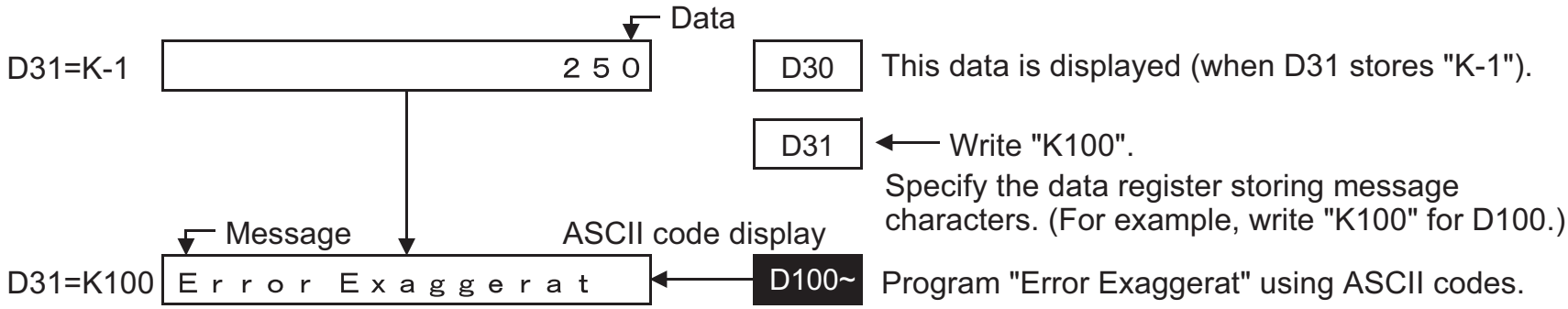

The data is displayed, then the displayed contents can be changed over to a message.
Only the data is displayed (in the same way as "3: VALUE ONLY" above).
Program the device No. storing the message and ASCII codes for the message in the sequence program.

6.3.2 "DISPLAY SET"

Set the contents to be displayed in "ENTRY MONITOR" (Specify devices for messages and comments.).

Setting procedure

Use "1: DISPLAY SET" in "3: MONITOR SET" on the "SYSTEM MODE" menu.

Description on the setting screen in the 10DM

The contents displayed on the "DISPLAY SET" screen are described below.

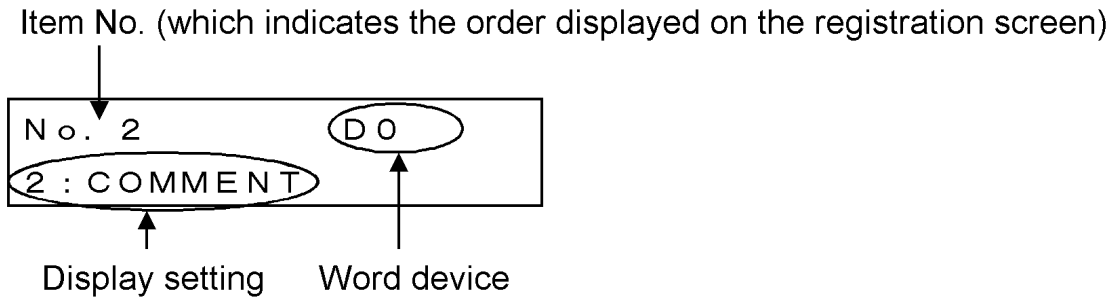

The display setting and the device of the item No. set once are overwritten.
You can delete the setting in the unit of item No. (For the operating procedure, refer to the description on the setting of "DEVICE RANGE".)

1.Introduction
2.Specifications
3.Installation
Wiring
Maintenance
4."SYSTEM MODE" Menu
5.Environmental Setting
"MONITOR SET"
"OTHER"
6.Display
"ENTRY MONITOR"
DEVICE MONITOR
7.Attachment
ASCII codes
Setting sheet
Error message list

6.3.3 Operating procedure for "ENTRY MONITOR"

In the example, T5 and "VALUE ONLY" are set to the item No. 4.

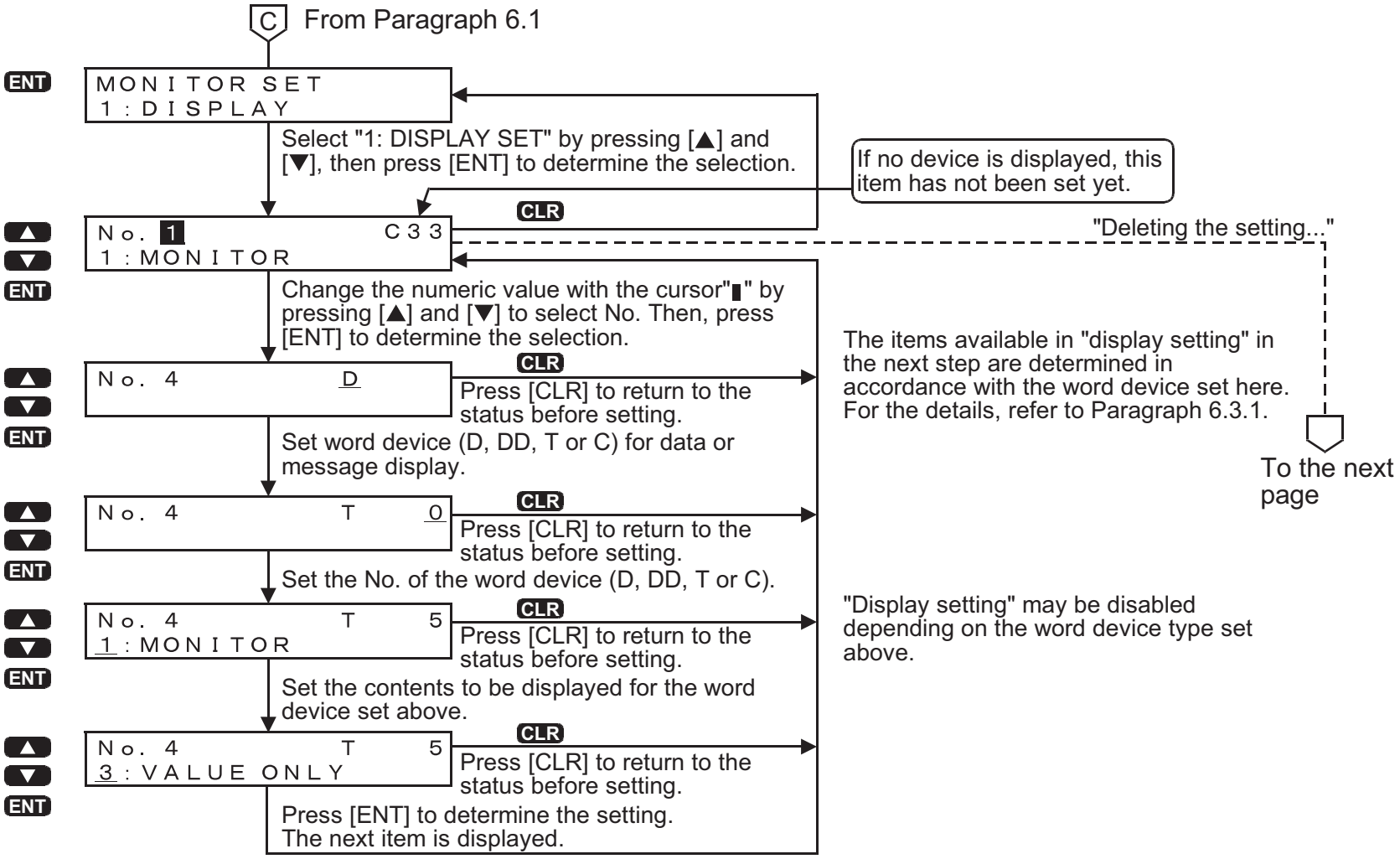

Deleting the setting in "DISPLAY SET"

If you would like to delete an item, make sure that the cursor "▮" is flickering in the item No. to be deleted, press [FNC] + [CLR] keyi.

The figure below shows the screen while "RANGE OK" is being set.

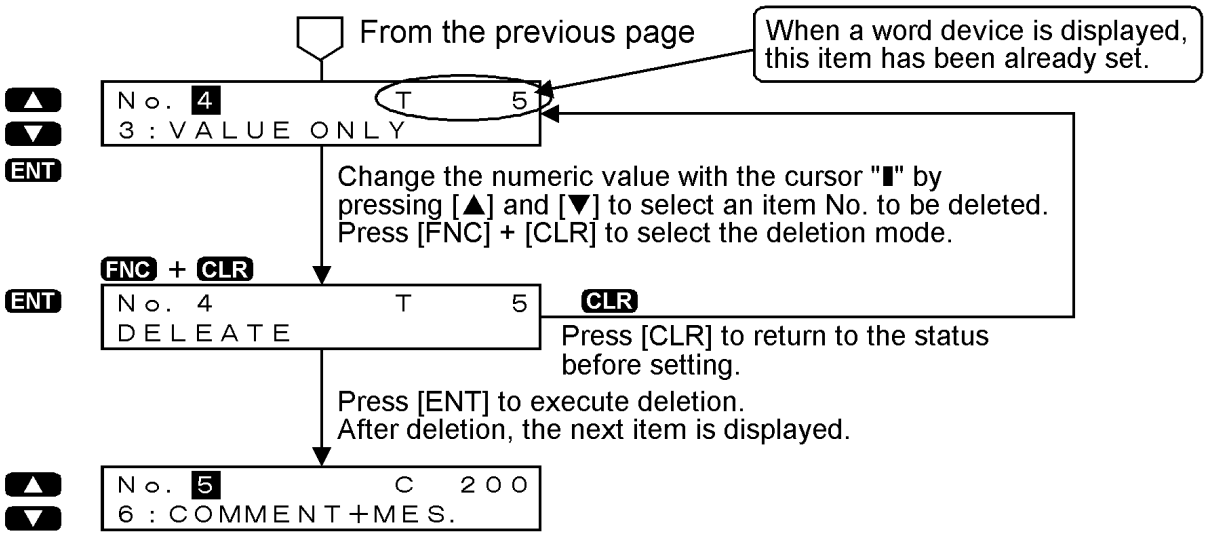

1.Introduction
2.Specifications
3.Installation
Wiring
Maintenance
4."SYSTEM MODE" Menu
5.Environmental Setting
"MONITOR SET"
"OTHER"
6.Display
"ENTRY MONITOR"
DEVICE MONITOR
7.Attachment
ASCII codes
Setting sheet
Error message list

6.3.4 Creation of comments

You should create comments using the programming software.
(The table below shows representative programming tools.)

Table 6.3:

Programming software model name	Comment creation function name	Version
FX-PCS/AT-EE	Comment	—
FX-PCS/WIN-E	Device comment	Ver. 3.00 or later
SW□D5C-GPPW-E	Device comment	□ = 2 or more

For the details of the operating procedure and the specifications of each software above, refer to the corresponding manual.

Setting procedure	Operation example using FX-PCS/WIN-E
1. Prepare either programming software shown above.	
2. Set the comment capacity using a parameter.	Input a numeric value (block) to the comment setting in "Option"-"Parameter settings…".
3. Input a comment to a device in half-width characters. For available characters, refer to the ASCII code table (Attachment 7.1).	Display the comment list in "View"-"Comment view"-"Device comment: Device name", then input a comment.
4. Write the program to the PLC, and transfer it.	Execute "PLC"-"Transfers"-"Write…".

5. Store the comment information of the 10DM. Search for the comment information using the "READ OUT COMM" function in "OTHER" on the "SYSTEM MODE" menu in the 10DM.

Setting procedure

The 10DM searches for and stores the information on locations of the comment of the device written in the memory of the PLC, then displays corresponding characters.
If you have changed the characters of the comment, they are transferred to the PLC and the displayed contents are changed accordingly. However, if you have changed the number of characters, you should execute "READ OUT COMM" in the 10DM again.

1.Introduction
2.Specifications
3.Installation
Wiring
Maintenance
4."SYSTEM MODE" Menu
5.Environmental Setting
"MONITOR SET"
"OTHER"
6.Display
"ENTRY MONITOR"
DEVICE MONITOR
7.Attachment
ASCII codes
Setting sheet
Error message list

6.3.5 Creation of messages

You should create character strings to be displayed in sequence programs. This paragraph describes a setting example for displaying only messages. Displayed character strings can be changed over in programs.

Program creation procedure

1. In "DISPLAY SET" in the 10DM, set the display setting and the device.

Table 6.4:

Item No.	Device	Display setting
1	D0	4: MESSAGE

2. Convert character strings to be displayed into ASCII codes in accordance with the ASCII table.

Table 6.5:

Display example	ASCII code (hexadecimal)	Assignment
Production	50, 72, 6F, 64, 75, 63, 74, 69, 6F, 6E	D100 or more
Drive	44, 72, 69, 76, 65	D110 or more

3. Assign characters to data registers as follows.
   Characters are displayed in the order of "upper 8 bits → lower 8 bits" of data registers.

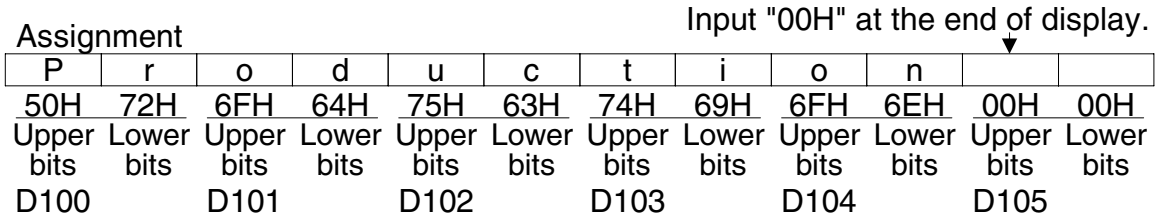

4. Make a sequence program which displays character strings.
   Transfer ASCII codes to the data registers to which characters are assigned using the MOV instruction (FNC 12).

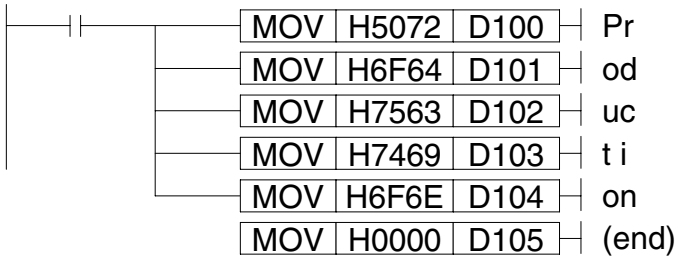

5. Make a sequence program which changes over displayed character strings.

In the same way, make a program which writes "2. OPERATION" to D110.

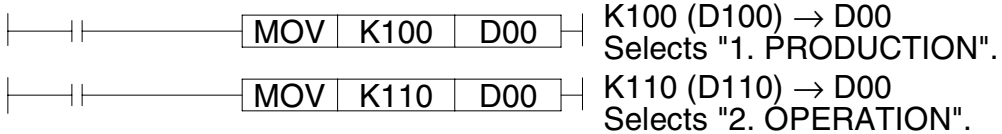

1.Introduction
2.Specifications
3.Installation
Wiring
Maintenance
4."SYSTEM MODE" Menu
5.Environmental Setting
"MONITOR SET"
"OTHER"
6.Display
"ENTRY MONITOR"
DEVICE MONITOR
7.Attachment
ASCII codes
Setting sheet
Error message list

6.3.6 Setting program example

1) Setting in the 10DM

Table 6.6:

Setting in "ENTRY MONITOR"		Display in 10DM	Remarks				
Item	Set value		ASCII codes (Refer to attachment.)				Sequence program
1	No.1 D200 4: MESSAGE	Control	Co H436F	nt H6E74	ro H726F	l H6C00	a) Write ASCII codes shown on the left to data registers D100 and later. b) Write the data register data No. (K100) of the message to be displayed to D200.
2	No.2 D202 2: COMMENT	Number 1234	—				Use the software which can create comments using the sequence programming tool.
3	No.3 D204 1: MONITOR	D204 1234	—				

2) Example of sequence program

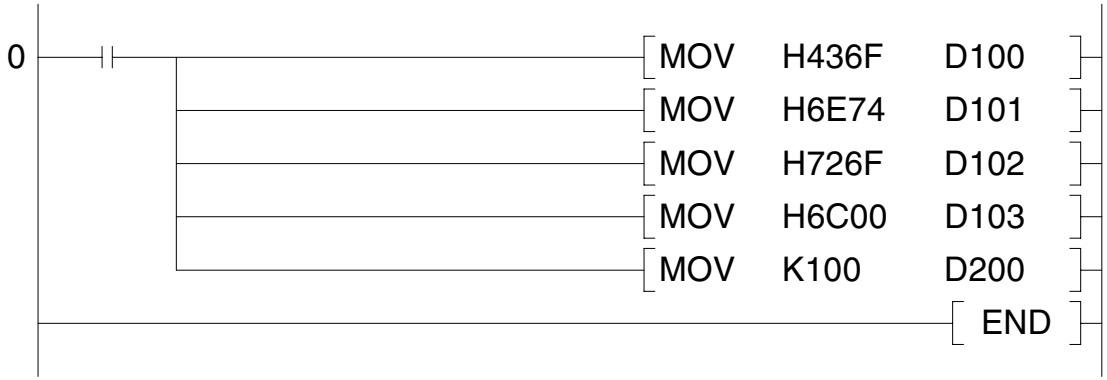

1.Introduction
2.Specifications
3.Installation
Wiring
Maintenance
4."SYSTEM MODE" Menu
5.Environmental Setting
"MONITOR SET"
"OTHER"
6.Display
"ENTRY MONITOR"
DEVICE MONITOR
7.Attachment
ASCII codes
Setting sheet
Error message list

6.4 "DEVICE MONITOR"

"2: DEVICE MONITOR" allows to monitor word devices and change their data using easy operating procedures.

Table 6.7:

Display	Description on functions
2: DEVICE MONITOR	Allows to select word devices (D, T and C) of the PLC, and display and change the current value (D, T and C) and the set value (T and C). Up to 2 data registers (D), 1 timer (T) or 1 counter (C) can be displayed at a time. Data registers (D) and a timer (T) or counter (C) cannot be displayed at the same time.

Display example

Data registers only

```
D34          789
DD10      -123456
```

Timer

```
T0        3276.7s
          S 3276.7s
```

Counter

```
C0           32767
             S 32767
```

When specifying the device No. or data, press the [▲] key to increase it, and press the [▼] key to decrease it.
When the [▲] or [▼] key is pressed and held, the device No. or data increases or decreases quickly. Use the [FNC] key to specify the digit.

What will happen when a keyword is set in the PLC?

When the 10DM displays the keyword input request message, you should input characters. When the characters you have input agree with the keyword set in the PLC, the keyword is released and you can change the current value (D, T and C) and the set value (T and C) of word devices.
(After you input characters and press the [ENT] key, the keyword remains released until the power of the 10DM is turned on. You do not have to input any character for releasing the keyword again as far as the power of the 10DM remains on.)

1.Introduction
2.Specifications
3.Installation
Wiring
Maintenance
4."SYSTEM MODE" Menu
5.Environmental Setting
"MONITOR SET"
"OTHER"
6.Display
"ENTRY MONITOR"
DEVICE MONITOR
7.Attachment
ASCII codes
Setting sheet
Error message list

6.5 Operating procedure for devices

6.5.1 Change of word devices for device monitor

This paragraph describes the procedure to specify word devices.

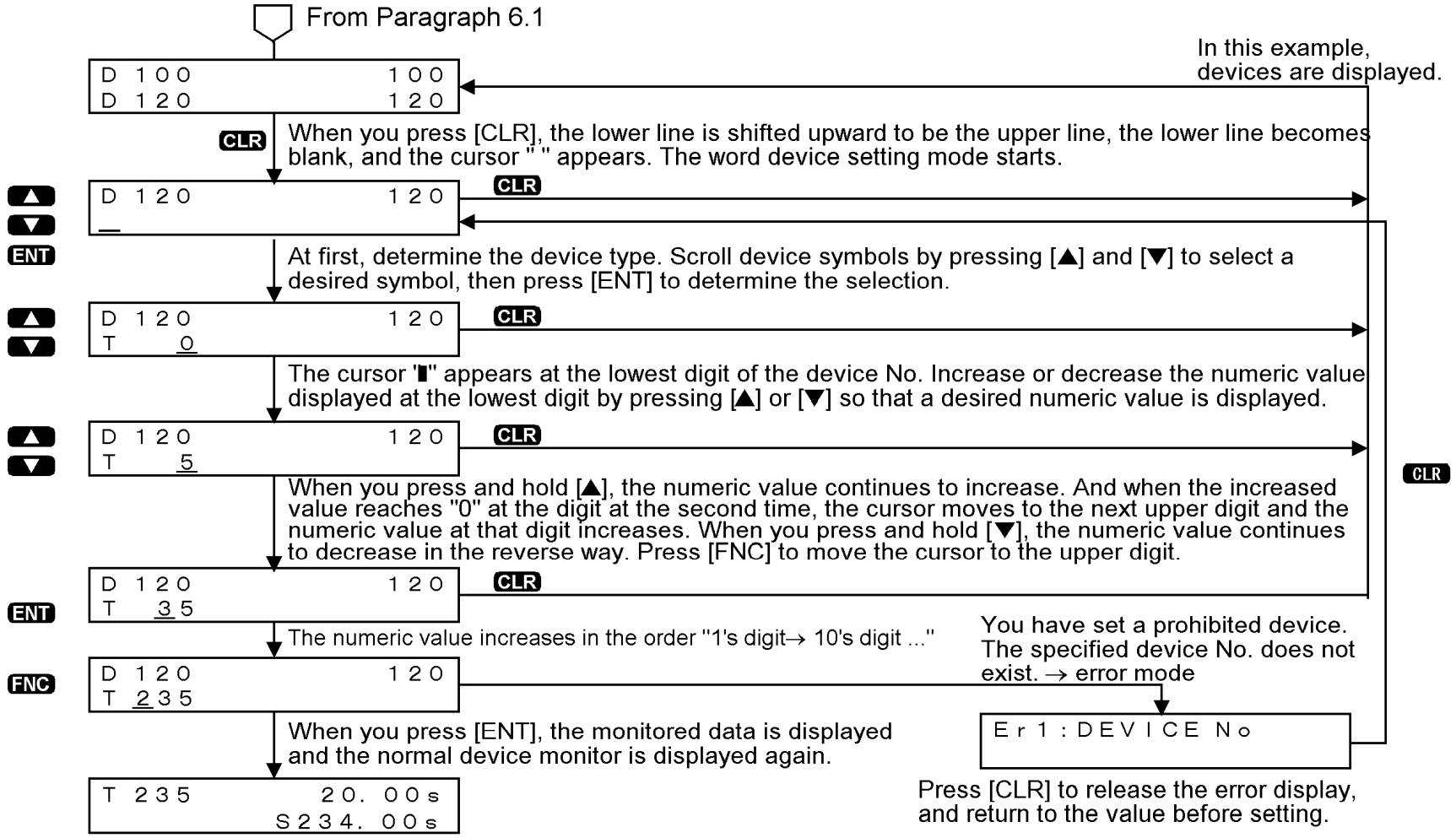

Because a timer (T) occupies 2 lines, it is displayed as shown in the lowest screen above. A counter (C) is displayed in the same way. In the case of a data register (D or DD), it is displayed in the line below "D120".

6.5.2 Change of data in device monitor (T)

This paragraph describes the operating procedure to change the set value of a timer.

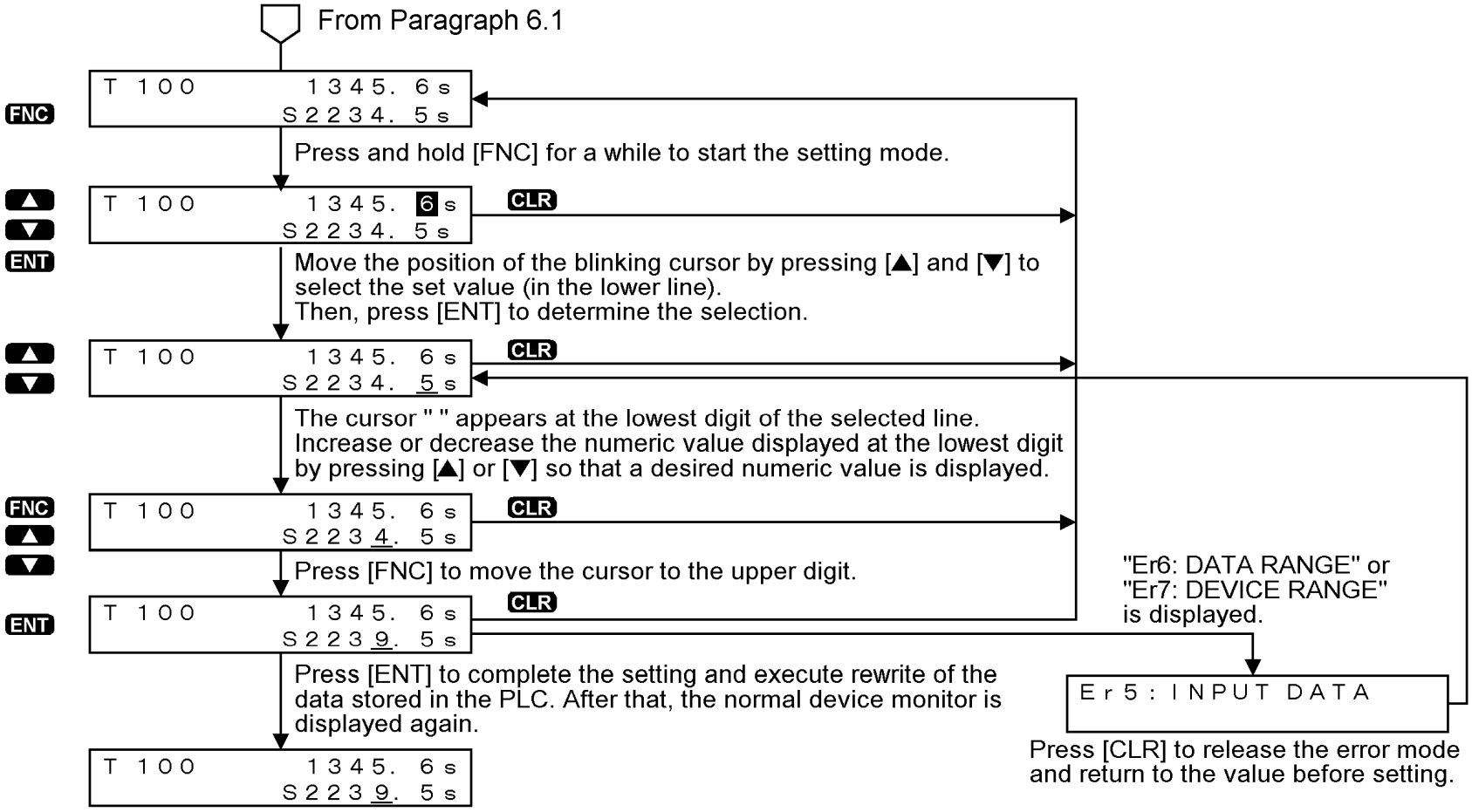

6.5.3 Change of data in device monitor(D)

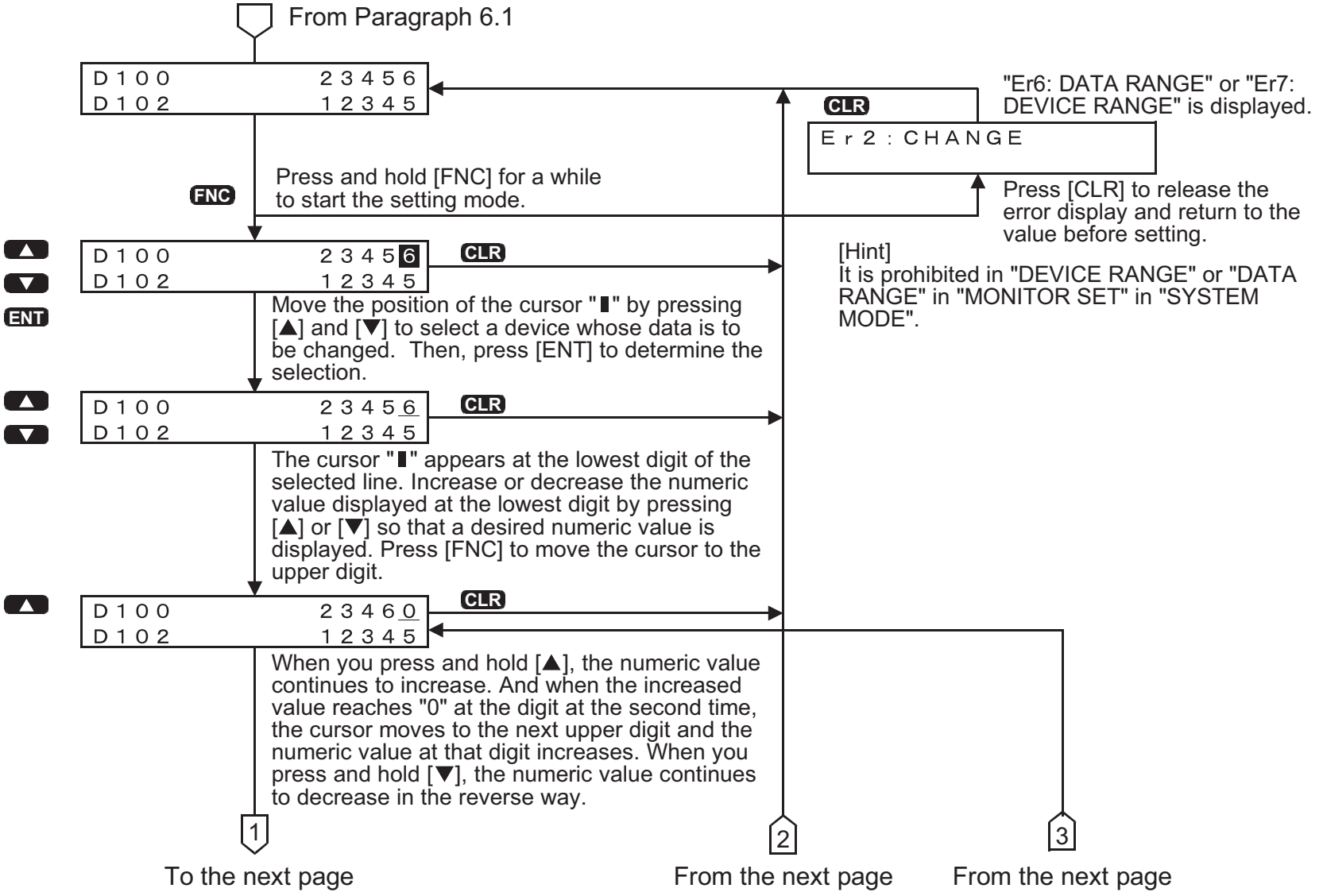

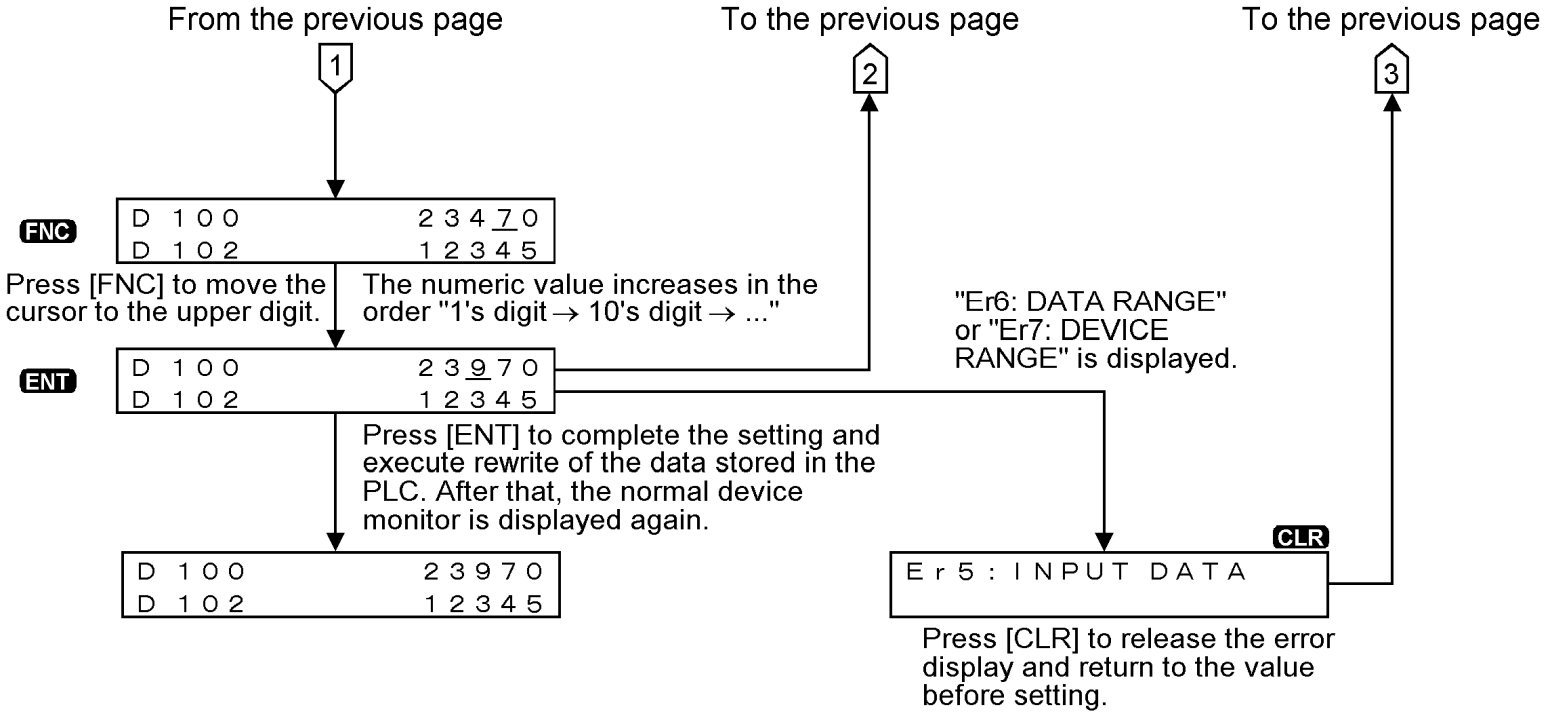

* When you press the [CLR] key in the setting mode shown above, the 10DM returns to the normal mode. At this time, the data whose setting is not completed is canceled and not written to the PLC.

1.Introduction
2.Specifications
3.Installation
Wiring
Maintenance
4."SYSTEM MODE" Menu
5.Environmental Setting
"MONITOR SET"
"OTHER"
6.Display
"ENTRY MONITOR"
DEVICE MONITOR
7.Attachment
ASCII codes
Setting sheet
Error message list

6.5.4 Change of sign (+ or -) of data

This paragraph describes the procedure to change the sign of the data to minus (-) or plus (+).

Target devices: D, DD and C (C200 to C255)

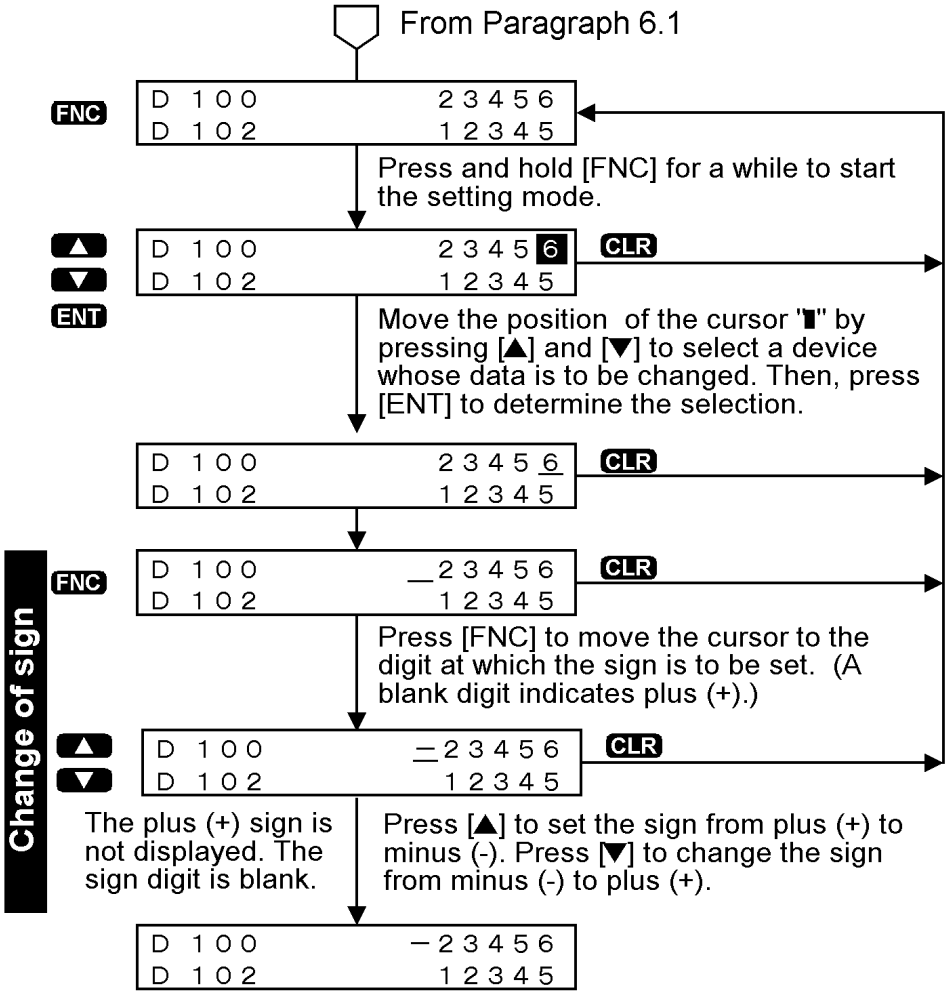

You can set the sign by increasing or decreasing the numeric value by pressing the [▲] or [▼] key. However, it takes considerable time to set a large numeric value.

[▲] Current value [▼]
← -2 ← -1 ← 0 → 1 → 2 →

[Cautions on key operation]
When you change the sign by pressing the [▲] or [▼] key then press the [▲] or [▼] key, the 10DM performs the following operation.
For example, when you have set the sign to minus (-) by mistake and would like to return the sign to plus (+):
When you have set the sign to minus by pressing the [▼] key then press the [▲] key, the cursor "▮" moves to the lowest digit.
Press the [FNC] key to move the cursor to the sign digit, then press the [▲] key.
The 10DM is so designed that the cursor moves to the lowest digit if you have changed the sign by pressing the [▲] or [▼] key then press another key.

6.5.5 Operating procedure to release keyword

If a keyword to protect programs is set in the PLC, when you try to change the data, the keyword input request message appears to ask you to input the keyword.

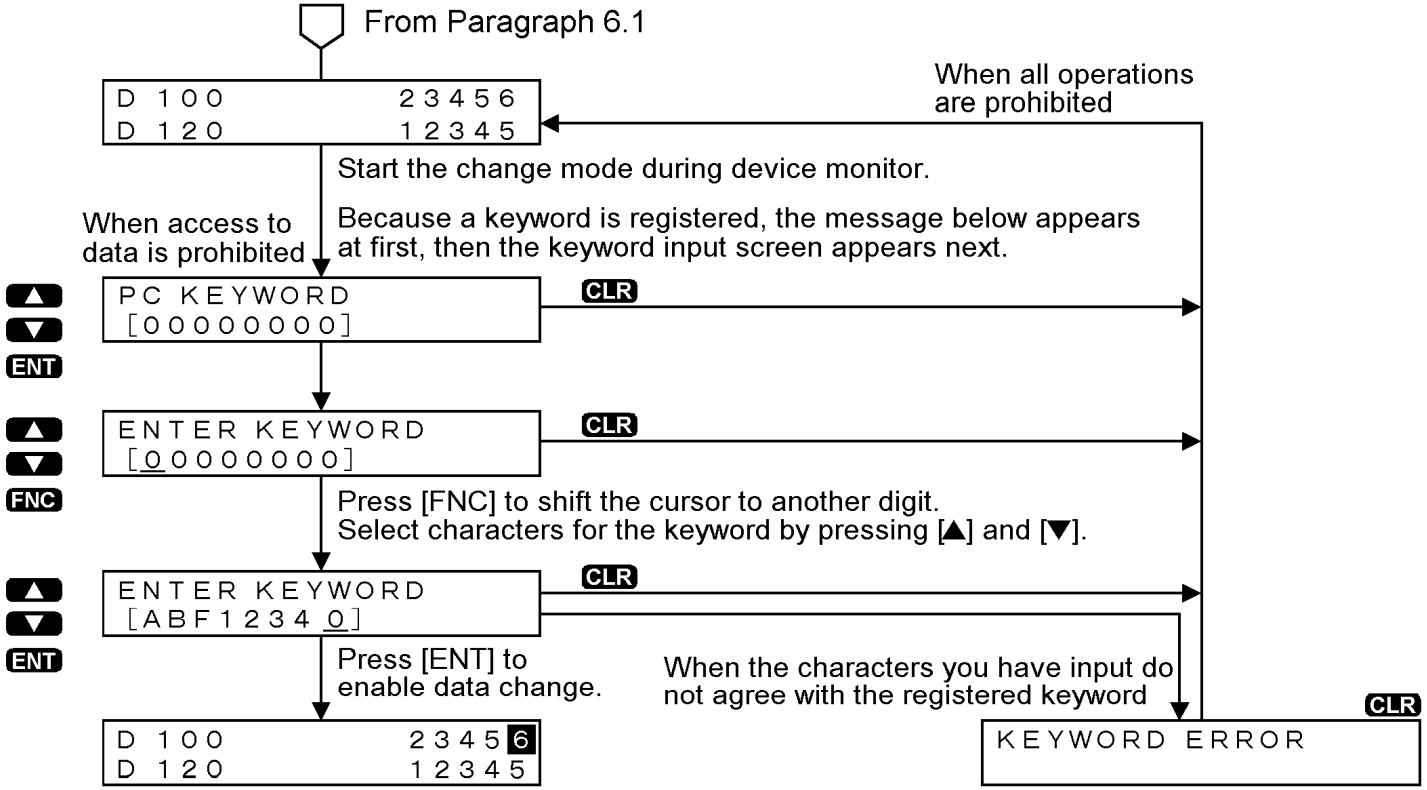

By the procedure above, the keyword set in the PLC is temporarily released.
In order to validate the keyword again, turn off the power of the 10DM once. Then, the keyword stored in the memory inside the 10DM is cleared, and the keyword set in the PLC becomes effective again.

1.Introduction
2.Specifications
3.Installation
Wiring
Maintenance
4."SYSTEM MODE" Menu
5.Environmental Setting
"MONITOR SET"
"OTHER"
6.Display
"ENTRY MONITOR"
DEVICE MONITOR
7.Attachment
ASCII codes
Setting sheet
Error message list

6.5.6 Reset of word devices

This paragraph describes the procedure to reset the current value of a data register (by writing "K0" to it).

Target devices: D, DD, T (current value) and C (current value)

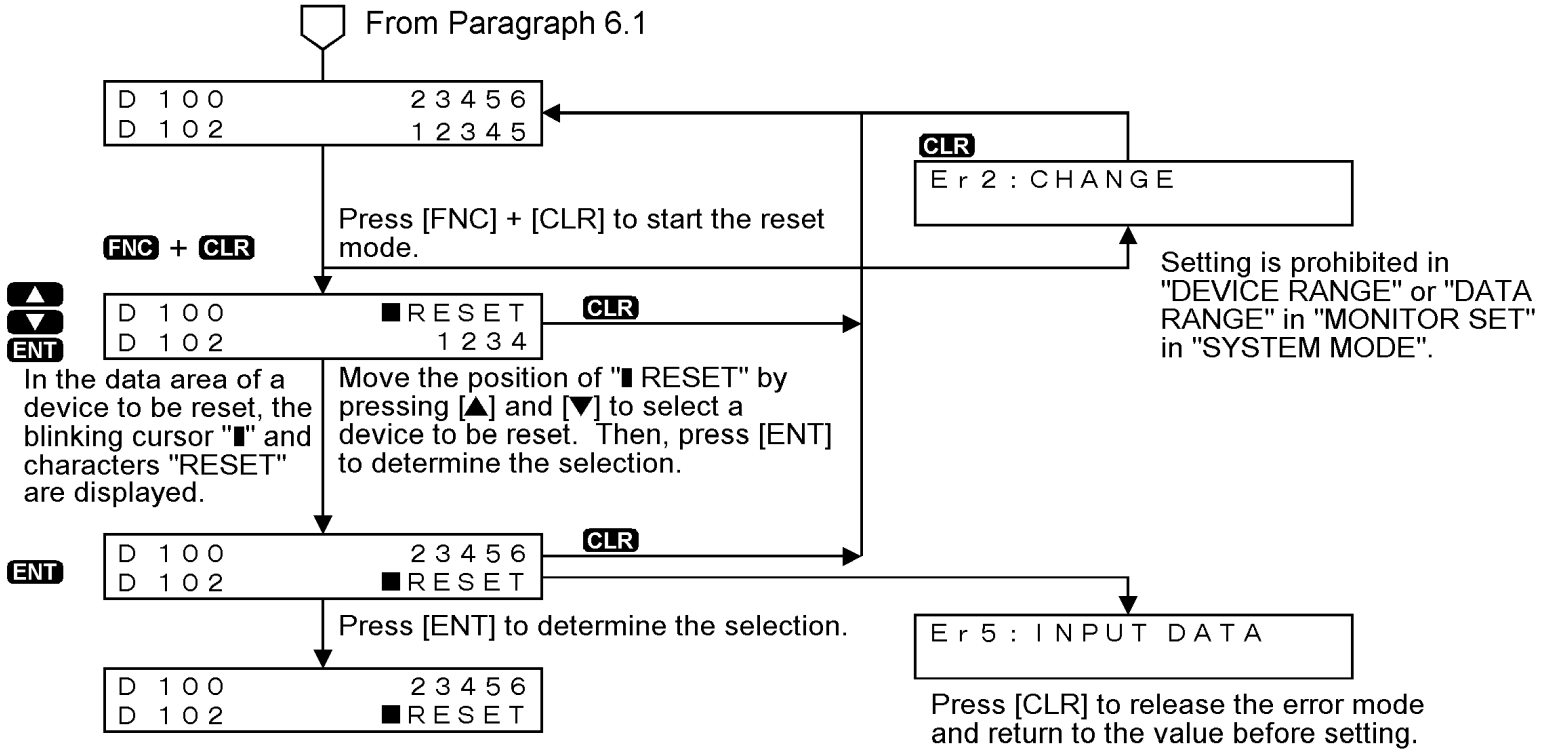

If a word device to be reset uses a data register (D), timer (T) or counter (C) in a sequence program (especially when it uses a data register), the word device may not be overwritten.
In such a case, the program may set some data to the word device using the MOV instruction, etc. in the program.
The word device reset function described in this paragraph is effective to all word devices in principle, but is practically suitable to reset of the current value of counters (C).

7. Attachment

7.1 Displayed characters (ASCII codes)

The tables below show characters which can be displayed in messages and comments in the "ENTRY MONITOR" function in the 10DM and the corresponding ASCII codes. For an ASCII code not shown in the tables below, space is displayed. Only in the case of "K0 (H00)", however, it is regarded as the end of the line and the proceeding data is not displayed (blank display).

Japanese (Katakana characters)

(Full-width characters)

ア B1	イ B2	ウ B3	エ B4	オ B5
カ B6	キ B7	ク B8	ケ B9	コ BA
サ BB	シ BC	ス BD	セ BE	ソ BF
タ C0	チ C1	ツ C2	テ C3	ト C4
ナ C5	ニ C6	ヌ C7	ネ C8	ノ C9
ハ CA	ヒ CB	フ CC	ヘ CD	ホ CE
マ CF	ミ D0	ム D1	メ D2	モ D3
ヤ D4	ユ D5	ヨ D6		
ラ D7	リ D8	ル D9	レ DA	ロ DB
ワ DC	ン DD			ヲ A6

(Half-width characters)

ｱ A7	ｲ A8	ｳ A9	ｴ AA	ｵ AB
ｬ AC	ｭ AD	ｮ AE	ｯ AF	

Symbols

! 21	″ 22	# 23	$ 24	% 25
& 26	’ 27	(28	) 29	＊ 2A
+ 2B	, 2C	− 2D	. 2E	／ 2F
: 3A	; 3B	< 3C	= 3D	> 3E
? 3F				
[5B	¥ 5C	] 5D	^ 5E	5F
{ 7B	| 7C	} 7D	~ 7E	
。 A1	「 A2	」 A3	、 A4	・ A5
゛ DE	゜ DF			
SP A0				

Alphabets

(Full-width characters)

A 41	B 42	C 43	D 44	E 45
F 46	G 47	H 48	I 49	J 50
K 4B	L 4C	M 4D	N 4E	O 4F
P 50	Q 51	R 52	S 53	T 54
U 55	V 56	W 57	X 58	Y 59
Z 5A				

(Half-width characters)

a 61	b 62	c 63	d 64	e 65
f 66	g 67	h 68	i 69	j 6A
k 6B	l 6C	m 6D	n 6E	o 6F
p 70	q 71	r 72	s 73	t 74
u 75	v 76	w 77	x 78	y 79
z 7A				

Numbers

0 30	1 31	2 32	3 33	4 34	5 35	6 36	7 37	8 38	9 39

The lower line in each column shows the corresponding ASCII code in hexadecimal number.

1.Introduction
2.Specifications
3.Installation
Wiring
Maintenance
4."SYSTEM MODE" Menu
5.Environmental Setting
"MONITOR SET"
"OTHER"
6.Display
"ENTRY MONITOR"
DEVICE MONITOR
7.Attachment
ASCII codes
Setting sheet
Error message list

7.2 "ENTRY MONITOR" setting sheet

When examining the display layout of "ENTRY MONITOR", copy this sheet and fill it in. Each of data registers (D) and messages requires 1 line in display. Each of timers (T) and counters (C) requires 2 lines in display.

Item No.	Write down the layout of displayed characters.															
Example	P	r	o	d	u	c	t	i	o	n						
	1	2	3	4	5	6	7	8	9	10	11	12	13	14	15	16

Item No.

1	T20	0.00s
		S00.0s
2	MESSAGE	
3	D55	1234
4	COMMENT(D0)	1234

When examining the contents of "ENTRY MONITOR" in the 10DM, copy this sheet and fill it in. For the fill-in method, refer to the examples below ("2: COMMENT", "5: MONITOR+MES." and "7: VALUE+MES."

Item No.	Contents of setting						
	1:MONITOR Occupies either one among D, DD, T and C.	2:COMMENT Occupies either one among D, DD, T and C.	3:VALUE ONLY Occupies either one among D, DD, T and C.	4:MESSAGE Occupies D and D+1 or DD and DD+1.	5:MONITOR + MES. Occupies D and D+1 or DD and DD+1.	6:COMMENT + MES. Occupies D and D+1 or DD and DD+1.	7:VALUE + MES. Occupies D and D+1 or DD and DD+1.
Example	D, DD, T, C	D, DD, (T), C 50	D, DD, T, C	D, DD	(D), DD 100, 101	D, DD	D, (DD) 200,201,202,203
1	D, DD, T, C	D, DD, T, C	D, DD, T, C	D, DD	D, DD	D, DD	D, DD
2	D, DD, T, C	D, DD, T, C	D, DD, T, C	D, DD	D, DD	D, DD	D, DD
3	D, DD, T, C	D, DD, T, C	D, DD, T, C	D, DD	D, DD	D, DD	D, DD
4	D, DD, T, C	D, DD, T, C	D, DD, T, C	D, DD	D, DD	D, DD	D, DD
5	D, DD, T, C	D, DD, T, C	D, DD, T, C	D, DD	D, DD	D, DD	D, DD
6	D, DD, T, C	D, DD, T, C	D, DD, T, C	D, DD	D, DD	D, DD	D, DD
7	D, DD, T, C	D, DD, T, C	D, DD, T, C	D, DD	D, DD	D, DD	D, DD
8	D, DD, T, C	D, DD, T, C	D, DD, T, C	D, DD	D, DD	D, DD	D, DD

1.Introduction
2.Specifications
3.Installation
Wiring
Maintenance
4."SYSTEM MODE" Menu
5.Environmental Setting
"MONITOR SET"
"OTHER"
6.Display
"ENTRY MONITOR"
DEVICE MONITOR
7.Attachment
ASCII codes
Setting sheet
Error message list

7.3 Error message list

If an error message is displayed in the 10DM, take countermeasures while referring to the table below. At the top of an error message, "Er + No." is added so that it can be distinguished from any message displayed by the user.

Table 7.1:

Display	Countermeasures
Er0: PC COMMS	There may be an abnormality in the connection status between the PLC and the 10DM or in the FX-20P-CAB(0)/EN cable. 1) Check whether the cable is sufficiently inserted on both the PLC and 10DM sides. 2) Check whether there are no abnormalities such as flaws on the cable or damages in the connectors.
Er1: DEVICE No	The word device No. you have input is beyond the range built in the connected PLC. Confirm the device specifications of the PLC, and observe the allowable range. Supplement: The FX1/FX/FX2N(FX2NC)Series is checked. However, the FX0/FX0S/FX0N/FX1S Series is regarded as the FX Series, and is not checked. And the FX1N Series is regarded as the FX2N Series, and is not checked.
Er2: CHANGE	Data (set value) or a file register was not able to be written to the PLC. You tried to overwrite the data (set value) or a file register (D1000 or later) from the 10DM while an EPROM memory cassette is mounted in the PLC. Or you set the following in "MONITOR SET" : ·"2: DEVICE RANGE" is set to "2: ERROR-ALL DEV" ·"3: DATA RANGE" is set to "2: ERROR-ALL DEV"

Table 7.1:

Display	Countermeasures
Er3: CANNOT WRITE	In the “ENTRY MONITOR” or "DEVICE MONITOR" display, the word device range in which the data can be changed is beyond the setting in the 10DM.
Er4: PC RUNNING	Data (set value) or a file register was not able to be written to the PLC. You tried to overwrite the data of a file register (D1000 or later) from the 10DM while an EEPROM memory cassette is mounted in the PLC. Write is disabled. Replace the EEPROM memory cassette with an RAM memory cassette.
Er5: INPUT DATA	You input a value beyond the allowable data range to a word device. (The allowable data range varies depending on the word device type.) This error does not occur usually because the 10DM checks the range of each input value.
Er6: DATA RANGE	In the "ENTRY MONITOR" or "DEVICE MONITOR" display, the available data range is exceeded. Check the setting of "3: DATA RANGE" in "MONITOR SET". If "1: RANGE OK" is selected, you tried to input word data or data which is not set.
Er7: DEVICE RANGE	In the "ENTRY MONITOR" or "DEVICE MONITOR" display, the available device No. range and data range are exceeded. Check the setting of "2: DEVICE RANGE" in "MONITOR SET". If "1: RANGE OK" is selected, you tried to input word data which is not set.

1.Introduction
2.Specifications
3.Installation
Wiring
Maintenance
4."SYSTEM MODE" Menu
5.Environmental Setting
"MONITOR SET"
"OTHER"
6.Display
"ENTRY MONITOR"
DEVICE MONITOR
7.Attachment
ASCII codes
Setting sheet
Error message list

MEMO

USER'S MANUAL

FX-10DM-E DISPLAY MODULE

MITSUBISHI ELECTRIC CORPORATION

HEAD OFFICE: TOKYO BUILDING, 2-7-3 MARUNOUCHI, CHIYODA-KU, TOKYO 100-8310 JAPAN

MODEL	FX-10DM-U-E
MODEL CODE	09R911

Effective April 2015

Specification are subject to change without notice.

JY992D86401H
(MEE)